CAMBRIA COMMUNITY SERVICES DISTRICT

MEETING	TIME & DATE	LOCATION
Resources & Infrastructure Committee	2:00 PM Monday, December 15, 2025	Cambria Veterans' Memorial Hall, 1000 Main Street, Cambria, CA 93428

AGENDA

Regular Resources & Infrastructure Committee Meeting

December 15, 2025 at 2:00 PM

In person at:
Cambria Veterans' Memorial Hall
1000 Main Street, Cambria, CA 93428
AND via Zoom at:
Please click the link to join the webinar: HERE
Webinar: 873 7001 5736
Passcode: 575668

Copies of the staff reports or other documentation relating to each item of business referred to on the agenda are on file in the CCSD Administration Office, available for public inspection during District business hours. The agenda and agenda packets are also available on the CCSD website at https://www.cambriacsd.org/. In compliance with the Americans with Disabilities Act, if you need special assistance to participate in this meeting or if you need the agenda or other documents in the agenda packet provided in an alternative format, contact the Confidential Administrative Assistant at 805-927-6223 at least 48 hours before the meeting to ensure that reasonable arrangements can be made. The Confidential Administrative Assistant will answer any questions regarding the agenda.

1. OPENING

1.A Call to Order

1.B Establishment of Quorum

1.C Chair Report

1.D Committee Member Communications

1.E Utilities Department Manager Report

2. PUBLIC COMMENT

Members of the public may now address the Committee on any item of interest within the jurisdiction of the Committee but not on its agenda today. Future agenda items can be suggested at this time. In compliance with the Brown Act, the Committee cannot discuss or act on items not on the agenda. Each speaker has up to three minutes.

3. CONSENT AGENDA

3.A Consideration to Approve the October 14, 2025 Regular Meeting Minutes, October 20, 2025 Special Meeting Minutes, and December 2, 2025 Special Meeting Minutes

4. REGULAR BUSINESS

4.A

Discussion and Consideration of the Updated Sanitary Sewer Management Plan and Consider Forwarding a Recommendation to the CCSD Board of Directors

4.B

Receive and Discuss the Updated Prioritized CIP List and General Fund CIP Budget Requests and Consideration to Forward the Updated CIP Lists to the Finance Committee for Review in the 2025/2026 Fiscal Year Preliminary Budget

4.C Review the 2026 Resources & Infrastructure Committee Regular Meeting Schedule

5. FUTURE AGENDA ITEM(S)

6. ADJOURN

CAMBRIA COMMUNITY SERVICES DISTRICT

MINUTES OF OCTOBER 14, 2025, REGULAR RESOURCES & INFRASTRUCTURE COMMITTEE MEETING OF THE CAMBRIA COMMUNITY SERVICES DISTRICT

A regular meeting of the Resources & Infrastructure Committee of the Cambria Community Services District was held at the Cambria Veterans' Memorial Hall, located at 1000 Main Street, Cambria, CA 93428, on Tuesday, October 14, 2025, at 2:00 PM

1. OPENING

1.A Call to Order

Chairperson Dean called the meeting to order at 2:00 pm.

1.B Establishment of Quorum

A quorum was established.

Committee members present: Karen Dean, James Webb, Steve Siebuhr, Mark Meeks, Donn Howell, and Jim Grimaud.

Staff present: General Manager Matthew, McElhenie (remote), Confidential Administrative Assistant Haley Dodson, Utilities Department Manager Jim Green, Program Manager Tristan Reaper, and Water Systems Superintendent Cody Meeks.

1.C Chair Report- none

1.D Committee Member Communications- none

1.E Utilities Department Manager Report

Utilities Manager Jim Green updated committee on an array of projects. SST project wrapping up. Exercise may have left PGE and Southland four million dollars in the hole. The San Simeon transmission line received a permit from CalTrans. Still need Right of Entry permit from State Parks to proceed. ZLD project should have two forty foot trailers coming in next week. Committee would like to tour when ZLD running. AMI integration nearly complete, majority of users now able to view accounts online at Eye On Water. Stuart St. tank rebuild progressing, second tank now gone. Committee plans to tour site October 20 at 3pm. Superintendent Meeks noted that staff working on repairing several leaks. Those identified by Asterra have all been repaired. Have requested second satellite view before Thanksgiving, weather permitting.

2. PUBLIC COMMENT-none

3. CONSENT AGENDA

3.A Consideration to Approve the August 18, 2025 Regular Meeting Minutes

Committee Member Meeks moved to approve.

Committee Member Webb seconded the motion.

The motion was approved: 5-Ayes; 0-Nays; 0-Abstain; 0-Absent

DRAFT

4. REGULAR BUSINESS

4.A Discussion and Consideration of Proposed Landscape Improvement Project at the Wastewater Treatment Plant and Approve a Recommendation to the Board of Directors

Utilities Manager Green outlined scope and cost of project, bid by Ecotones landscaping at 41K installed.

Committee Member Webb moved to bring to the board.

Committee Member Howell seconded the motion.

The motion was approved: 5-Ayes; 0-Nays; 0-Abstain; 0-Absent

5. FUTURE AGENDA ITEM(S)

Chairperson Dean asked for any future agenda items.

6. ADJOURN

Chairperson Dean adjourned the meeting at 2:46 p.m.

DRAFT

CAMBRIA COMMUNITY SERVICES DISTRICT

MINUTES OF OCTOBER 20, 2025, SPECIAL RESOURCES & INFRASTRUCTURE COMMITTEE MEETING OF THE CAMBRIA COMMUNITY SERVICES DISTRICT

A special meeting of the Resources & Infrastructure Committee of the Cambria Community Services District was held at the Stuart Street Water Tank, located at 1968 Richard Avenue, Cambria, CA 93428, on Monday, October 20, 2025, at 3:00 PM

1. OPENING

Chairperson Dean called the meeting to order at 3:00 pm.

Committee members present: Chair Karen Dean, Secretary Jim Webb, Steven Siebuhr, and Jim Grimaud.

Staff present: Confidential Administrative Assistant Haley Dodson, Utilities Department Manager Jim Green, Program Manager Tristan Reaper, Water Systems Superintendent Cody Meeks, and Admin Tech Eric Johnson.

Also present Construction Manager/Resident Engineer Kim Lindbery PE

2. PUBLIC COMMENT ON AGENDA ITEMS

Karen Chrisman
Chris Siebuhr
Allan Dean

3. REGULAR BUSINESS

3.A Tour of the Stuart Street Water Tank Construction Project

Attendees toured the project site, and received a description of the work done to this point, and the next steps. No formal action of any kind was taken.

4. FUTURE AGENDA ITEMS

Chairperson Dean asked for any future agenda items. There were none.

5. ADJOURN

Chairperson Dean adjourned the meeting at 4:00 p.m.

DRAFT

CAMBRIA COMMUNITY SERVICES DISTRICT

TO: Resources and Infrastructure Committee AGENDA NO. **4.A.**

FROM: James Green, Utilities Department Manager
Tristan Reaper, Program Manager

Meeting Date: December 15, 2025 Subject: Discussion and Consideration of the Updated Sanitary Sewer Management Plan and Consider Forwarding a Recommendation to the CCSD Board of Directors

BACKGROUND:
On May 24, 2012, the Board of Directors adopted the Cambria Community Service District's (CCSD) Sanitary Sewer Management Program to comply with the State Water Resources Control Board's (SWRCB) General Waste Discharge Order No. 2006-0003-DWQ Monitoring and Reporting Program (MRP), which was updated in 2013 when the SWRCB amended the MRP with the issuance of Order No. 2013-0058-EXEC. On June 5, 2023, the SWRCB issued Order No. WQ 2022-0103-DWQ, which superseded the previous orders. This more recent MRP further refined the specific categories of sanitary sewer overflows and associated reporting requirements and continued the requirements of internal auditing of the SSMP's effectiveness, among other changes. Additionally, the title has been modified to align with the "Sewer System Management Plan" used by the SWRCB in the aforementioned orders and associated guidebooks. The SSMP presented herein retitles the earlier program and provides an update to the CCSD's 2018 document.

DISCUSSION:
The goal of the SSMP is to provide a plan and schedule to properly manage, operate, and maintain all parts of the collection system to reduce and prevent the occurrence of a sanitary sewer overflow (SSO) and mitigate any SSOs that do occur. This is critical to protecting public health and the environment. An updated SSMP is to be completed at a minimum of every six years, with internal auditing of the SSMP occurring every three years. This current SSMP update focused on updating the 2018 SSMP to align with the requirements for SSMPs as outlined in Water Board Order No. WQ 2022-0103-DWQ, as well as updating expired information. This update also builds upon the original 2012 SSMP and the updated 2018 SSMP to include the required elements and sub-elements of sewer system management plans as outlined in Water Board Order No. WQ 2022-0103-DWQ, which are:

1. The SSMP goal and introduction
2. Organization information including contact information and a description of the "chain of command"
3. A description of the CCSD's legal authority to prevent illicit discharges into the sewer system, its authority to require proper construction of the sewer connections, ensure access to the sewer system, and limit the discharge of fats, oil and grease
4. An operation and maintenance program
5. A design and performance provision for the sewer system
6. A spill emergency response plan
7. Sewer pipe blockage control program which includes a fats, oil and grease control program
8. A system evaluation, capacity assurance, and capital improvement plans

9. A monitoring, measurement, and program modifications
10. Internal audits of the SSMP including audit procedures
11. A communication program.

The District has already undertaken work to improve the collection system since the last update to the SSMP. Significant work remains as the District strives to upgrade, replace, and enhance its collection system infrastructure and operations. The SSMP and the associated SWRCB orders form a mechanism to continuously improve upon the goal of eliminating and minimizing SSOs, and provide a high-level guide for the proper operation, maintenance, and continual improvement of the sanitary sewer system. The District's Finance and Resources and Infrastructure (R&I) Committees, along with the cost-of-service study and rate study, will play a crucial role in achieving this goal.

RECOMMENDATION:
Staff recommends that the Resources & Infrastructure Committee review and discuss the updated Sanitary Sewer Management Plan (SSMP) and forward a recommendation to the CCSD Board of Directors.

Attachments: Sewer System Management Plan
Appendix VII Appendix G. Sanitary Sewer Overflow Response Plan

CAMBRIA COMMUNITY SERVICES DISTRICT

SEWER SYSTEM MANAGEMENT PROGRAM

NOVEMBER 13, 2025

PREPARED FOR:

JAMES GREEN
5500 HEATH LANE, PO BOX 65
CAMBRIA, CA 93428

PREPARED BY:

MKN
354 PACIFIC ST
SAN LUIS OBISPO, CA 93401
805.904.6532

TABLE OF CONTENTS

INTRODUCTION 1-1
1.0 ELEMENT 1 - GOALS 1-1
1.1 Purpose of Report 1-1
1.2 Regulatory Requirements 1-1
1.2.1 Element 1 – Goals: Appendix A 1-1
1.3 Goals Discussion 1-1
2.0 ELEMENT 2 - ORGANIZATION 2-1
2.1 Regulatory Requirements 2-1
2.1.1 Element 2 – District Organization: Appendix B 2-1
2.2 District Organization 2-2
2.3 Description of General Responsibilities 2-2
2.4 Authorized Representative 2-2
2.5 Responsibility for SSMP Implementation 2-3
2.6 Chain of Communication for Responding to SSO 2-4
3.0 ELEMENT 3 – LEGAL AUTHORITY 3-1
3.1 Regulatory Requirements 3-1
3.1.1 Element 3 – Legal Authority: Appendix C & D 3-1
3.2 Prevention of Illicit Discharges 3-1
3.3 Design and Construction 3-2
3.4 Ensure Access for Maintenance, Inspection, and Repairs 3-2
3.5 FOG Control 3-3
3.6 Enforcement of its Sewer Ordinance 3-3
3.7 Disconnection for Illegal Use 3-3
3.8 Violations and Fines 3-3
4.0 ELEMENT 4 – OPERATIONS & MAINTENANCE PROGRAM 4-1
4.1 Regulatory Requirements 4-1
4.1.1 Element 4 – Operation & Maintenance Program: Appendix E 4-1
4.2 Map of Sanitary Sewer System 4-1
4.3 Preventative Operation and Maintenance Activities 4-2
4.4 Rehabilitation and Replacement Plan 4-2
4.5 Training 4-3
4.6 Equipment Inventory 4-3
5.0 ELEMENT 5 – DESIGN & PERFORMANCE PROVISIONS 5-1
5.1 Regulatory Requirements 5-1

5.1.1 Element 5: Trunk Sewer Connection Standard Procedure: Appendix G 5-1
5.2 Design and Performance Standards 5-1
5.3 Procedures and Standards 5-2
6.0 ELEMENT 6 – OVERFLOW EMERGENCY RESPONSE PLAN 6-1
6.1 Regulatory Requirements 6-1
6.1.1 Element 6 – SSO Packet: Appendix G 6-1
6.2 Sewer System Overflow Notification and Reporting 6-2
6.3 Sewer System Overflow Response 6-4
6.4 Training 6-5
6.5 Traffic and Crowd Control 6-5
6.6 Sewer System Overflow Impact Mitigation 6-5
7.0 ELEMENT 7 – FOG CONTROL PROGRAM 7-1
7.1 Regulatory Requirements 7-1
7.1.1 Element 7 – Enhanced Maintenance Areas: Appendix H 7-1
7.2 FOG Control Program Discussion and Outreach 7-1
7.3 Identification of Grease Problem Areas and Sewer Cleaning 7-2
7.4 Legal Authority 7-3
8.0 ELEMENT 8 – SYSTEM EVALUATION, CAPACITY ASSURANCE, AND CAPITAL IMPROVEMENTS PLAN 8-1
8.1 Regulatory Requirements 8-1
8.1.1 Element 8 – Capital Improvement Plan: Appendix I 8-1
❖ List of Anticipated and Completed Wastewater Projects since 2018 8-1
8.2 System Evaluation and Condition Assessment 8-1
8.2.1 System Evaluation 8-2
8.3 Capacity Assessment and Design Criteria 8-4
8.3.1 Design Criteria 8-5
8.4 Prioritization of Corrective Action 8-5
8.5 Capital Improvement Plan 8-6
9.0 ELEMENT 9 – MONITORING, MEASUREMENT, AND PROGRAM MODIFICATIONS 9-1
9.1 Regulatory Requirements 9-1
9.1.1 Element 9 – Monitoring, Measurement & Program Modification: Appendix H & J 9-1
9.2 Monitoring and Measurement 9-1
9.3 Identifying Trends 9-2
9.4 SSMP Updates 9-3
10.0 ELEMENT 10 – SSMP AUDITS 10-1
10.1 Regulatory Requirements 10-1

10.1.1 Element 10 – Internal Audits Appendix K 10-1
10.2 SSMP Audit Procedure 10-1
11.0 ELEMENT 11 – COMMUNICATION PLAN 11-1
11.1 Regulatory Requirements 11-1
11.1.1 Element 11 – Communication Plan: Appendix L 11-1
11.2 Communication Program 11-1
11.3 Staff Training and Communication 11-3

LIST OF TABLES

Table I-1 SSMP & Subsequent Update Due Dates 1-4
Table I-2 Audit Due Dates 1-5
Table 2-1 SSMP & Subsequent Update Due Dates 2-3
Table 4-1 Equipment Inventory List 4-4

LIST OF FIGURES

Figure I-1 Cambria System Map 1-3
Figure 2-1 Chain of Communication for Responding to SSOs 2-5
Figure 6-1 CIWQS Reporting Requirements 6-3

LIST OF APPENDICES

Appendix A: ..... SSMP Schedule & Board Meeting Minutes
Appendix B: ..... District Staff & Organization
Appendix C: ..... Municipal Code Title V
Appendix D: ..... Wastewater Ordinance S-82
Appendix E: ..... Change Log
Appendix F: ..... Trunk Sewer Connection Standards
Appendix G: ..... SSO Reporting Packet
Appendix H: ..... Enhanced Maintenance Areas
Appendix I: ..... Capital Improvement Plan List
Appendix J: ..... Manhole Inspection Form
Appendix K: ..... Internal Audit
Appendix L: ..... Record of Training

List of Abbreviations

BMP	Best Management Practice
CCTV	Closed Circuit Television
CIP	Capital Improvement Plan or Capital Improvement Program or Capital Improvement Project
CIWQS	California Integrated Water Quality System
CDFW	California Department of Fish and Wildlife
FOG	Fats, Oils, and Grease
FSE	Food Service Establishments
GIS	Geographic Information System
GWDR	General Waste Discharge Requirements and/or Waste Discharge Requirements (WDR)
HMA	High Maintenance Area
I/I	Inflow / Infiltration
LRO	Legally Responsible Official
MGD	Million Gallons Per Day
MKN	Michael K. Nunley & Associates
MS4	Municipal Separate Storm Sewer System
NPDES	National Pollutant Discharge Elimination System
O&M	Operation and Maintenance
OERP	Overflow Emergency Response Plan
OES	Office of Emergency Services
PM	Preventative Maintenance
PMP	Preventative Maintenance Program
POTW	Public Owned Treatment Works
R&R	Rehabilitation and Replacement
RWQCB	Regional Water Quality Control Board
SSMP	Sewer System Management Plan
SSO	Sanitary Sewer Overflow
SSOR	Sewer System Overflow Report
SSORP	Sanitary Sewer Overflow Response Plan
SSS	Sanitary Sewer System
SWRCB	State Water Resources Control Board
UPC	Uniform Plumbing Code
WDR	Waste Discharge Requirements and/or General Waste Discharge Requirements (GWDR)
WWTP	Wastewater Treatment Plant
RWQC	Regional Water Quality Control
MRP	Monitoring and Reporting Plan
PLSD	Private Lateral Sewage Discharge
EHD	Environmental Health Department
EMA	Enhanced Maintenance Area

Previous Studies and Reports

The following studies, reports, and other materials were reviewed during the preparation of this Report:

1. Cambria Community Services District – 2018 Sewer System Management Plan Update, prepared by Cambria Community Services District

INTRODUCTION

This section provides background information on the purpose and organization of this Sewer System Management Plan (SSMP) and provides a brief overview of the Cambria Community Services District's (District) sewer service area and collection system.

District Service Area and Sewer System

The District's service area covers approximately 3,200 acres (five square miles). The unincorporated coastal community of Cambria is located along Highway 1 in northwestern San Luis Obispo County, California, about 35 miles north of the City of San Luis Obispo.

The District is an independent special district responsible for providing water, wastewater, fire protection, parks, and other essential community services. The Wastewater Department manages the collection and treatment of sanitary waste for a population of approximately 6,200 residents. The sanitary sewer collection system consists of ten (10) lift stations and fifty-nine (59) miles of gravity sewers and force mains, which discharge to the District's wastewater treatment plant (WWTP), as shown in **Figure I-1**. The WWTP has a one-million gallon per day (mgd) capacity and serves the entire District.

SSMP Requirement Background

On May 2, 2006, The State Water Resources Control Board (SWRCB) adopted Water Quality Order No. 2006-0003-DWQ), requiring all public wastewater collection system agencies in California with greater than one mile of sewers to be regulated under General Waste Discharge Requirements (GWDR). The SWRCB action mandates the development of an SSMP and the reporting of SSOs using an electric reporting system. An audit of the plan is required every two years to identify the effectiveness of the SSMP, and an overall update of the SSMP (using the audits to identify the sections and content of the SSMP to update) is required every five years from the date the original document was approved and certified.

On February 20, 2008, Attachment A to the Order was promulgated and is known as Attachment A, SWRCB Order No. WQO 2008-0002-EXEC, amending the RWQCB Monitoring and Reporting Program for Statewide GWDR for Sanitary Sewer System (SSS). Together these documents constitute the SSS Waste Discharge Requirements (WDR).

On July 30, 2013, Attachment A to the Order was promulgated and became effective on September 9, 2013 and is known as Attachment A, SWRCB Order No. WQO 2013-0058-EXEC, amending the Monitoring RWQC and Reporting Program for Statewide GWDR for Sanitary Sewer System (SSS). Together these documents constitute the SSS Waste Discharge Requirements (WDR).

On December 6, 2022, the SWRCB adopted Statewide General Waste Discharge Requirements for Sanitary Sewer Systems, Water Quality Order No. 2022-0103-DWQ (Sanitary Sewer Systems General Order) to provide a consistent, statewide regulatory approach to address sanitary sewer spills. In addition, updates to SSMPs are required every six (6) years and audits completed every three (3) years.

The District's SSMP was originally developed in May 2012 and approved by the Board of Directors on May 24, 2012. The District completed its first revision in May 2018. The District's third revision was started

in June of 2023 and was never completed or accepted by the Board. The 2025 SSMP update serves as the fourth significant update to the plan. This SSMP will be audited and updated per the required schedule.

To align with state terminology, the SSMP title has been updated to "Sewer System Management Plan", as referenced in SWRCB orders and guidance documents. This 2025 update serves to:

- Ensure compliance with the latest Monitoring and Reporting Plan (MRP) requirements
- Address any identified deficiencies

Cambria Community Services District

Sewer System Management Program

Figure I-1: Wastewater Collection System

1 inch = 2,000 feet

0 2,000

Feet

Document Organization

This SSMP is intended to meet the requirements of both the Regional Water Quality Control Board (RWQCB) and the Statewide GWDR. The SSMP includes eleven elements:

1. Goals
2. Organization
3. Legal Authority
4. Operations & Maintenance Program
5. Design & Performance Provisions
6. Overflow Emergency Response Plan
7. FOG Control Program
8. System Evaluation, Capacity Assurance Management, and Capital Improvement Plan
9. Monitoring, Measurement, and Program Modifications
10. SSMP Program Audits
11. Communication Plan

Plan & Schedule Regulatory Requirement

Both the SSMP and the program to implement the SSMP must be certified by the District's Board of Directors to comply with the requirements set forth above and must be presented to the Board for approval at a public meeting. The current update to the District's SSMP was approved/certified in December 2025 by the District Board. **Table I-1** and **Table I-2** below present due dates for both the District SSMPs and the audits.

Table I-1 SSMP & Subsequent Update Due Dates			
Original Plan Required Due Date	**Required Plan Due Date**	**Required Plan Due Date**	**Required Plan Due Date***
08/02/2009	08/02/2014	08/02/2019	08/02/2025
Note: *Per Section 5.5 and Attachment E1, Section 3.11 of the General Order, Plan updates are due within six years after the required due date of the Enrollee's last Plan Update			

Table I-2 Audit Due Dates						
Original Required Plan Audit Due Date	**Required Plan Audit Due Date**	**Required Plan Audit Due Date**	**Required Plan Audit Due Date**	**Required Plan Audit Due Date**	**Required Plan Audit Due Date**	**End of Required 3-Year Audit Period[1]**
08/02/2011	08/02/2013	08/02/2015	08/02/2017	08/02/2019	08/02/2021	08/02/2024
Notes: [1]Per Section 5.4 and Attachment E1, Section 3.10 of the General Order, the Audit Report is due within six months after the end of the required 3-year audit period						

1.0 ELEMENT 1 - GOALS

This section identifies the goals that the District has set for the management and Operation & Maintenance (O&M) of the sewer system and discusses the role of the SSMP in supporting these goals.

1.1 Purpose of Report

These goals provide focus for the District staff to continue high-quality work and to implement improvements in the management of the District's wastewater collection system. This element was last updated in 2018.

1.2 Regulatory Requirements

The summarized requirements for the Goals element of the SSMP are as follows:

RWQCB Requirement

The collection system agency must develop goals to manage and maintain all parts of the collections system. The goals address the provisions of adequate capacity to convey peak wastewater flows, as well as a reduction in the frequency of SSOs and the mitigation of their impacts.

SWRCB Requirement

The collection system agency must develop goals to properly manage, operate, and maintain all parts of its wastewater collection system to reduce and prevent SSOs, as well as to mitigate any SSOs that occur.

1.2.1 Element 1 – Goals: Appendix A

Supporting information for Element 1 is included in **Appendix A** which contains the following document:

- SSMP Schedule
- Minutes of Board Meetings for SSMP Approval (Dates)

1.3 Goals Discussion

The District has developed the following SSMP goals which will contribute to the proper management of the collection system and assist in minimizing the frequency and impacts of SSO's. These goals will be accomplished through providing proper guidance for appropriate maintenance, operations management, and emergency response. The following list summarizes the District's SSMP goals:

1. Continue with the proactive approach to minimize the likelihood of an SSO. In the event of an SSO the goal of operations staff is to perform an analysis determining if any changes to the current process/management of the collection system is warranted.
2. Convey wastewater to the WWTP with a minimum of Infiltration and Inflow in the wastewater collection system.

3. Prevent public health hazards through proper regulatory notification, emergency response, SSO containment, and SSO clean up procedures.
4. Minimize inconveniences by responsibly and quickly handling interruptions in wastewater collection service.
5. Protect large investments in collection system by maintaining adequate capacities and extending useful life.
6. Use available funds for sewer operations in the most efficient manner. Identify, prioritize, and continuously upgrade and replace sewer system facilities to maintain reliability and adequacy of service to customers.
7. Provide adequate capacity to convey peak wastewater flows
8. Perform all operations in a safe manner to avoid personal injury and/or property damage.
9. Be available and responsive to the needs of the public. Work cooperatively with local, state and federal agencies to reduce, mitigate, and properly report an SSO.
10. Implement regular, practical maintenance of the sewer collection system to remove roots, debris, sand, fats, oil, and grease (FOG) in areas prone to blockages that may cause SSO or sewer backups.
11. Implement and maintain a FOG program to minimize and/or prevent fats, oils, and grease from entering the collection system.

2.0 ELEMENT 2 - ORGANIZATION

This section identifies District Staff who are responsible for implementing this SSMP, responding to SSO events, and meeting the SSO reporting requirements. This section also includes the designation of the Legally Responsible Official (LRO) to meet SWRCB requirements for completing and certifying spill reports.

This element was last updated in June 2025.

2.1 Regulatory Requirements

The summarized requirements for the Organization element of the SSMP are as follows:

RWQCB Requirement

The collection system agency's SSMP must identify Staff responsible for implementing measures outlined in the SSMP, including management, administration, and maintenance positions. Identify the chain of communication for reporting and responding to SSOs.

SWRCB Requirement

The collection system agency's SSMP must identify:

- The name of the responsible and authorized representative;
- The names and telephone numbers for management, administrative, and maintenance positions responsible for implementing specific measures in the SSMP program. Include lines of authority as shown in an organization chart or similar documents with a narrative explanation; and

  The chain of communication for reporting SSOs, from receipt of a complaint or other information, including persons responsible for reporting SSOs to the State and RWQCB and other agencies if applicable (such as County Health Officers, County Environmental Health Agency, California Department of Fish and Wildlife (CDFW), Coast Guard, and/or State Office of Emergency Services (OES).

2.1.1 Element 2 – District Organization: Appendix B

Supporting information for Element 2 is included in **Appendix B** which contains the following documents:

- Current List of Board of Directors
- Current List of Staff & Contact Information
- Agency Notification List for SSOs
- District Organizational Chart

- Emergency Contractors

2.2 District Organization

The District is governed by a five-member Board of Directors, elected at-large by the community's registered voters to serve staggered four-year terms. The Board is responsible for setting policy, approving budgets, and providing overall direction for the District's services, including the sewer collection system. Policy decisions, major capital improvements, and regulatory compliance matters are considered and approved by the Board during publicly noticed meetings. Operational decisions and day-to-day management of the sewer collection system are delegated to the General Manager and District staff. The Board's responsibilities include adopting ordinances, resolutions, and policies that guide the administration and operation of the wastewater collection and treatment systems, ensuring regulatory compliance, public health protection, and reliable service to the Cambria community. For the organizational chart and the names of the current Board member see **Appendix B.**

2.3 Description of General Responsibilities

Oversight and management of the District's sewer collection system is shared among several key positions within the District. The General Manager serves as the chief executive officer, responsible for implementing Board policies, managing District operations, and ensuring regulatory compliance across all services, including wastewater collection and treatment. Reporting to the General Manager, the Utilities Department Manager oversees the day-to-day operations, maintenance, and capital improvement projects for the sewer collection system, as well as supervises operational staff and coordinates emergency response activities. The Wastewater Supervisor is directly responsible for the supervision of collection system operations, including scheduling routine maintenance, managing sanitary sewer overflow (SSO) response, ensuring compliance with the SSMP, and maintaining regulatory records. Supporting these roles, Collection System Operators perform field-level duties such as pipeline cleaning, lift station maintenance, inspections, and repairs. Together, this team ensures the safe, reliable, and compliant operation of the sewer collection system, with each position contributing to system performance, regulatory reporting, and customer service.

2.4 Authorized Representative

The District has a designated LRO pursuant to Section J., Report Declaration, of the State General WDR (Order No. 2006-0003) who is responsible for data submittals and reporting. All sewer system overflow events as well as system activities are to be reported to the Responsible Authorized Representative. The Responsible Authorized Representative is determined by the District General Manager.

The District's LRO is the Wastewater Systems Superintendent. Their contact information is provided in **Appendix B**.

Table 2-1 SSMP & Subsequent Update Due Dates		
Name	**Title**	**CIWQS SSO Database**
Matthew McElhenie	General Manager	Legally Responsible Official
Toni Artho	Wastewater Systems Superintendent	Legally Responsible Official

2.5 Responsibility for SSMP Implementation

The General Manager and the Wastewater Systems Superintendent are responsible for overseeing the implementation and maintenance of all elements of this SSMP.

Responsibility for Element 1 – Goals

The General Manager is responsible for leafing staff in the implementation of the District's goals.

Responsibility for Element 2 – Organization

The General Manager is responsible for updating the organizational structure, SSMP implementation assignments, and SSO response and reporting change of communication, as needed.

Responsibility for Element 3 – Legal Authority

The General Manager is responsible for upholding the relevant Sanitary Code and for drafting new ordinances, as needed.

Responsibility for Element 4 – Operations and Maintenance (O&M)

The General Manager and the Wastewater Systems Superintendent are responsible for 1) resources and budget, 2) outreach to contractors, 3) prioritizing Preventative Maintenance (PM), 4) purchasing contingency equipment and replacement inventories, 5) training for staff, 6) updating the collection systems map, and 7) scheduling inspections and conditions assessment.

Responsibility for Element 5 – Design and Performance Standards

The General Manager or designee is responsible for reviewing design and construction documents to ensure that all construction projects meet the proper standards.

Responsibility for Element 6 – Overflow Emergency Response Plan (OERP)

The General Manager and Chief Plant Officer are responsible for implementation of the OERP, including revisions to the plan and annual training for maintenance crew members and staff.

Responsibility for Element 7 – FOG Control Program

The General Manager or their delegate is responsible for identifying grease High Maintenance Areas (HMAs) and maintaining an effective cleaning program for problematic grease-prone sewers. The Collection System Operators are responsible for inspecting grease traps/interceptors that have been installed at non-residential locations and for enforcing discharge regulations.

Responsibility for Element 8 – System Evaluation and Capacity Assurance Plan

The General Manager or their delegate is responsible for establishing and assessing capacity requirements for the District's trunk lines and for preparing and implementing the System Evaluation and Capacity Assurance Plan. They are also responsible for the development and implementation of the District's long-term Capital Improvement Plan (CIP), including updating budgets and schedules.

Responsibility for Element 9 – Monitoring, Measurement, and Program Modification

The General Manager is responsible for monitoring the implementation of and assessing success of the overall SSMP program elements, with the assistance of the Wastewater Systems Superintendent. This position is responsible for identifying trends in SSO occurrences and providing recommendations to the District Board.

Responsibility for Element 10 – SSMP Audits

The audit shall be conducted by the District Wastewater Systems Superintendent. Audit findings shall be addressed by staff and followed up by the General Manager. It is the responsibility of the Cambria CSD's Regulatory Official to provide staff with findings and the corrective actions needed to develop a timeline for completion.

Responsibility for Element 11 – Communication Plan

The General Manager is responsible for communicating with the public and regulatory agencies regarding the status of the District's SSMP.

2.6 Chain of Communication for Responding to SSO

The District has procedures that provide for effective notification of each category of SSOs through a step-by step method of communication by staff at different levels, as shown in **Figure 2-1**. The procedures for SSO reporting are reviewed and updated as needed to ensure full compliance with all regulatory and legal requirements.

The public may report a sewer spill by calling District personnel at (805) 927-6223.

If a call reporting a spill is received, the District is to contact the following agencies within the timeframes noted:

(For a complete list of current personnel to be contacted see **Appendix B**).

1. San Luis Obispo County Environmental Health Services
    - Contact immediately if there is potential or actual public contact with sewage.
    - Contact within 2 hours if the spill exceeds 1,000 gallons or reaches waters of the state.
2. Central Coast Regional Water Quality Control Board (RWQCB – Region 3)
    - Contact within 2 hours if the spill exceeds 1,000 gallons or reaches waters of the state.
    - RWQCB staff require a 24-hour written report and may request a 5-day technical report.

3. San Luis Obispo County Office of Emergency Services (OES)
    - Contact within 2 hours if the spill exceeds 1,000 gallons or reaches waters of the state.
4. California Governor's Office of Emergency Services (Cal OES) Warning Center
    - Contact within 2 hours if the spill exceeds 1,000 gallons or reaches waters of the state.
    - 24-hour Warning Center Phone: (800) 852-7550
5. California Department of Fish and Wildlife
    - Contact within 2 hours if the spill affects fish, wildlife, or habitat.

Upon completion of containment and clean-up activities, the Wastewater Supervisor or designee will use the California Integrated Water Quality System (CIWQS) SSO Discharger Workbook to initiate and submit the draft SSO report to the State Water Resources Control Board (SWRCB) via the CIWQS database, in accordance with State reporting requirements.

Figure 2-1 Chain of Communication for Responding to SSOs

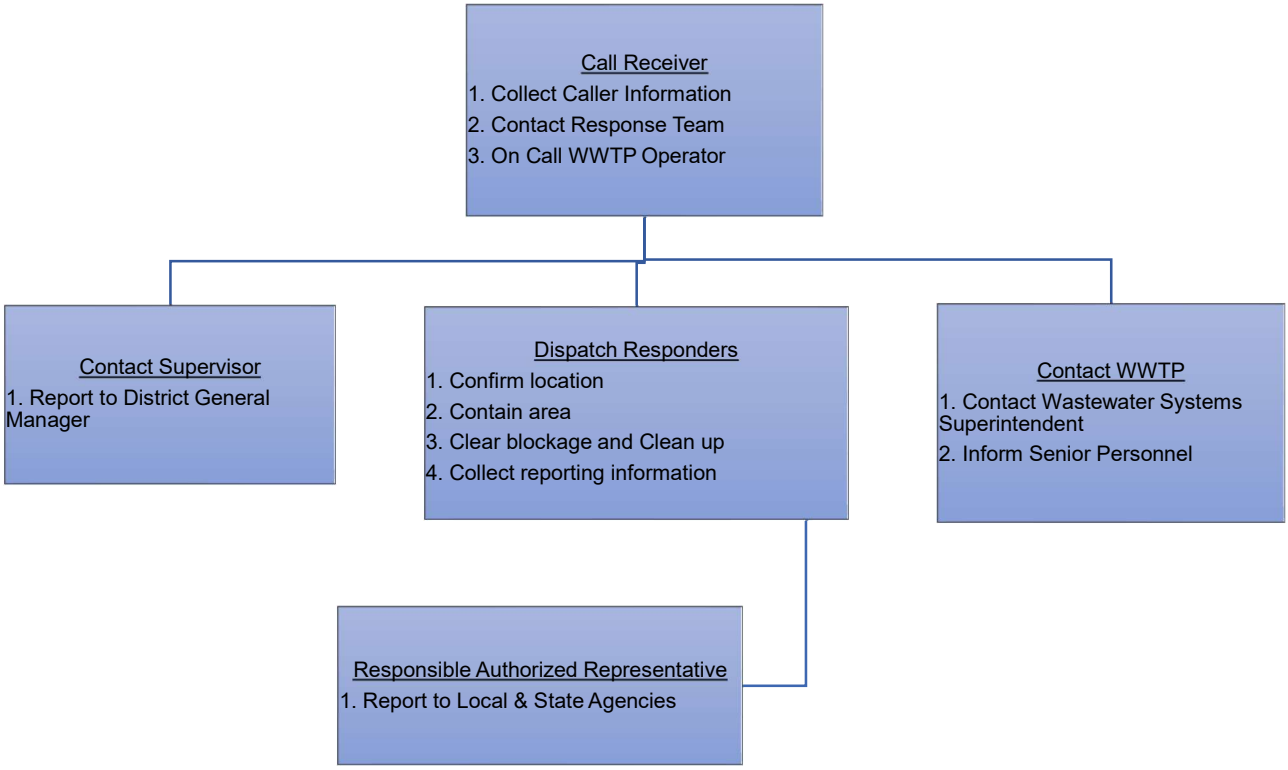

3.0 ELEMENT 3 – LEGAL AUTHORITY

This element includes legal authority, through sewer use ordinances, service agreements or other legally binding procedures, to prevent illicit discharges into the SSS. It will also address the legal authority in place to ensure proper design and construction of any additions or repairs to the sewer system.

The District has the necessary legal authority within its Municipal Code Chapters 5.04.020 through 5.04.860, as set forth below to prevent illicit discharges into its sewer system, require proper design and construction of its sewer connections, ensure access, and limit the discharge of fats, oil and grease.

This element was last updated in June 2025.

3.1 Regulatory Requirements

The District will demonstrate, through its SSS use ordinances, service agreements, or other legally binding procedures, that it possesses the necessary legal authority to:

- Prevent illicit discharges into its SSS (examples may include Inflow/Infiltration (I/I), storm water, chemical dumping, unauthorized debris and cut roots, etc.);
- Require that sewers and connections be properly designed and constructed;
- Ensure access for maintenance, inspection, or repairs for portions of the sewer system owned or maintained by the Public Agency;
- Limit the discharge of FOG and other debris that may cause blockages;

3.1.1 Element 3 – Legal Authority: Appendix C & D

- Wastewater Ordinance S-82
- Cambria Community Services District, California, Code of Ordinances: Title 5 WASTEWATER SYSTEMS

3.2 Prevention of Illicit Discharges

The District regulates and limits discharges of certain wastes into its sewers through Municipal Code section 5.04.160 entitled, “Types of Wastes Prohibited” specifically, section 5.04.160 states that:

“No person shall discharge or cause to be discharged any of the following described waters or wastes to any public sewers.”

A. Any gasoline, benzene, naphtha, fuel oil, or other flammable or explosive liquid, solid or gas;

B. Any waters or wastes containing toxic or poisonous solids, liquids, or gases in sufficient quantity, either singly or by interaction with other wastes, to injure or interfere with any wastewater treatment process, constitute a hazard to humans or animals, create a public nuisance, or create any hazard in the receiving water of the wastewater treatment plant including but not limited to cyanides in excess of two mg/l as CN in the wastes as discharges to the public sewer;

C. Any waters or wastes having a pH lower than 5.5 or having any other corrosive property capable of causing damage or hazard to structures, equipment, and personnel of the wastewater works;

D. Solid or viscous substances in quantities of such size capable of causing obstruction to the flow in sewers, or other interference with the proper operation of the wastewater works such as, but not limited to, ashes, cinders, sand, mud, straw, shavings, metal, glass, rags, feathers, tar, plastics, wood, un-ground garbage, whole blood, paunch manure, hair and flashings, entrails and paper dishes, cups, milk containers, etc. either whole or ground by garbage grinders.

- (Ord. S-82 §3-5)

Municipal code 5.04.170 entitled "Other wastes prohibited," gives additional authority to the General Manager to prohibit certain discharges if other "*such wastes can harm either the sewers wastewater treatment process, or equipment, have an adverse effect on the receiving stream, or can otherwise endanger life, limb, public property or constitute a nuisance*."

- (Ord. S-82 §3-6)

Municipal Code section 5.04.180 entitled *"Manager's discretion regarding waste discharges*" further provides the General Manager with the discretion to limit certain discharges into the District's sewer system which are determined to "*contain the substances or possess the characteristics…which in the judgment of the manager, may have a deleterious effect upon the wastewater works, processes, equipment, or receiving waters, or which otherwise create a hazard to life or constitute a public nuisance, and/or may cause the District to violate discharge requirements…*"

- (Ord. S-82 § 3-7)

3.3 Design and Construction

The District regulates the design and construction of sewers and sewer connections pursuant to Municipal Code Section 5.04.480. Specifically, section 5.04.480 states the minimum standards for design and construction of sewers within the District shall be in accordance with the plans, standards and specifications for Cambria Assessment No.1, except where requirements of the State or County are more restrictive, in which case the State or County requirements shall govern. The administration, inspection, enforcement and acceptance shall be by the District. The District may permit modifications or may require higher standards. Before acceptance of any sewer by the District, the sewer shall have been tested and all work shall have been completed in full compliance with the standards and the satisfaction of the District's Engineer.

- (Ord. S-82 §5-9)

3.4 Ensure Access for Maintenance, Inspection, and Repairs

District Municipal Code 5.04.090, "Power and Authorities of Inspectors" requires that:

"The Manager and any duly authorized employees of the Cambria CSD shall be permitted, upon showing evidence of his or her position, to enter private property for the purpose of inspection, re-inspection,

observation, measurement, sampling, testing or otherwise performing such duties as may be necessary in the enforcement of the provisions of the ordinances, rules and regulations of the Cambria CSD."

- (Ord. S-82 §2-9)

3.5 FOG Control

Municipal code 5.04.170 specifies in subsection B that the following may not be discharged:

"Any water or waste containing fats, wax, grease, or oils, whether emulsified or not, in excess of one hundred (100) mg/l or containing substances which may solidify or become viscous at temperatures between thirty-two (32) degrees Fahrenheit and one hundred fifty (150) degrees Fahrenheit;"

- (Ord. S-82 §3-6)

The District has continued its public outreach efforts related to FOG control through publication of the monthly newsletter, which is posted on the District's website. While no new enforcement provisions have been added to the Sewer Ordinance, this ongoing communication program serves as a proactive measure to reduce FOG-related impacts within the collection system

3.6 Enforcement of its Sewer Ordinance

District Municipal Codes 5.04.700 through 5.04.760 establish general enforcement and penalty provisions for violation of the District Municipal Codes and gives procedures for stepped enforcement if violations occur.

- (Ord. S-82 § 7-1) through (Ord. S-82 § 7-7)

3.7 Disconnection for Illegal Use

Municipal code 5.04.720 states that the General Manager has authority to disconnect the user or subdivision sewer system from the sewer mains of the District and the water service where the violation is occurring.

- (Ord. S-82 §7-3)

Municipal code 5.04.730 further states that during a period of disconnection habitation of such premises by human beings shall constitute a public nuisance;

"Whereupon the Cambria CSD shall cause proceedings to be brought for the abatement of the occupancy of the premises by human beings during the period of such disconnection".

- (Ord. S-82 §7-4)

3.8 Violations and Fines

Municipal code 5.04.750, "Violation of ordinances, rules and regulations is a misdemeanor",

"Pursuant to Section 6523 of the Health and Safety Code of the State of California, the violation of any of the provisions of an ordinance, rule or regulation of the Cambria CSD by any person shall be punishable by a fine not to exceed one thousand dollars ($1,000.00), imprisonment not to exceed one month or both. Each and every connection or occupancy in violation of any ordinance, rule and regulation of the Cambria CSD shall be deemed a separate violation and each and every day or part of a day a violation of the ordinance, rule or regulation continues shall be deemed a separate offense hereunder and shall be punishable as such".

- (Ord. S-82 §7-6)

4.0 ELEMENT 4 – OPERATIONS & MAINTENANCE PROGRAM

This element discusses the actions that are performed to accomplish the optimal Operation and Maintenance of the District's collection system. This ensures that the system is kept in good working condition. The section describes qualities of system and how frequently repairs are performed.

This element was last updated in June 2025.

4.1 Regulatory Requirements

Element 4 of the SSMP must identify how the District meets the following regulatory requirements from the SWRCB:

- Maintain an up-to-date map of the SSS, showing all gravity line segments and manholes, pumping facilities, and pressure pipes and valves
- Describe routine preventive O&M activities by staff and contractors; including a system for scheduling regular maintenance and cleaning of the SSS with more frequent cleaning and maintenance targeted at known problem areas. The Preventative Maintenance Program (PMP) program should have a system to document scheduled and conducted activities, such as work orders;
- Develop Rehabilitation and Replacement (R&R) plan to identify and prioritize system deficiencies and implement short-term and long-term rehabilitation actions to address each deficiency. The program should include regular visual and TV inspections of manholes and sewer pipes, and a system for ranking the condition of sewer pipes and scheduling rehabilitation. R&R should focus on sewer pipes that are at risk of collapse or prone to more frequent blockages due to pipe defects. Finally, the R&R plan should include a CIP that addresses proper management and protection of infrastructure assets. The plan shall include a time schedule for implementing the short- and long-term plans plus a schedule for developing the funds needed for the CIP;
- Provide training on a regular basis for staff in SSS operations, maintenance, and require contractors to be appropriately trained; and
- Provide equipment and replacement part inventories, including identification of critical replacement parts.

4.1.1 Element 4 – Operation & Maintenance Program: Appendix E

Supporting information for Element 4 is included in **Appendix E** which contains the following documents:

- Change Log

4.2 Map of Sanitary Sewer System

It is the responsibility of all those involved in the planning, engineering, construction, maintenance, and operation of the District to keep mapping records current and as accurate as possible. All responsible

office and field personnel should work from the same current map version to avoid inaccurate information and confusion. A map of the District's sewer system is shown in **Figure I-1.** To ensure quick emergency response and to avoid serious damage and possible injury, a system has been developed that tracks mapping updates and changes. Electronic forms are utilized whenever possible; however, paper forms are always available when technology is unavailable. An example of the form used to report changes can be found in **Appendix F**. Training of personnel on how to complete the appropriate forms, verify and make the mapping changes, and inform the rest of staff of the changes will be enacted upon adoption of this SSMP. To further augment and facilitate map updating, the District commissioned the completion of a GIS viewer and acquired a more accurate hand-held GPS locater. This allows operating staff to provide field coordinates on facilities needing mapping or mapping updates.

4.3 Preventative Operation and Maintenance Activities

The District has a preventative maintenance program which tracks all operations and maintenance activities of the District's Collection System. The Operator has developed a program to plan and track maintenance using a computerized maintenance program and reporting database "Diamond Maps". Previously, "KeepTrak" was utilized to pinpoint problem areas ("hotspots") and guide the frequency of pipeline cleaning and camera inspections.

4.4 Rehabilitation and Replacement Plan

The District completed a Wastewater Collection System Evaluation in 2020, which included smoke testing of the collection system to locate direct sources of inflow. This work, in addition to annual collection system cleaning and TV inspection, identified needed repairs and replacements for upcoming years. The repairs were then prioritized per an annual budgeting process. Completion of system-wide smoke testing As a result of the testing, 180 manhole lids were replaced with sealed pam rex.

The risk for deterioration, blockages, and collapse increases considerably with sewer system age. To address these risks, the District budgets for and performs sewer line cleaning at intervals ranging from 4 months to 2 years, and contracts CCTV inspections of manholes and sewer pipelines every 5 years, both within designated "Enhanced Maintenance Areas" of the collection system. The District completes engineering reviews and assessments on the information obtained from the CCTV inspections to prioritize noted system deficiencies. Short-term and long-term rehabilitation actions are implemented to address each deficiency. Short-term rehabilitation actions have included:

- Use of the new camera van for inspections
- Application of epoxy crack filler
- Implementation of RootX treatments
- Enzyme trial with Aquanatural Solutions.

Long-term rehabilitation actions are incorporated into upcoming fiscal year budgets as capital improvement projects (CIP). Short-term rehabilitation actions are funded through the annual operating budget developed for collection system maintenance. Work for short-term and long-term rehabilitation

actions are performed by area contractors through publicly bid service contracts awarded by the District. Examples of short- and long- term rehabilitation actions implemented by the District are described below.

In the Fiscal Year 2019-2020, the Lift Station A-1 Motor Control Center (MCC) underwent improvements, as well as the SCADA system.

Other planned Collection System projects include the following upgrades to 5 existing lift stations:

- New submersible pumps: LS A, A-1, B-1, & B-3
- Upgrading Motor Control Center: LS A & B-3
- Adding/Improving Bypass Piping: LS A, A-1, & B-3
- Installing new Control Panel: LS A & B-1 – 3
- Wet well & Valve Vault: LS B-1

4.5 Training

Those individuals who are involved in the planning, engineering, construction, maintenance, and operation of the Cambria CSD Collection System are encouraged to communicate openly and frequently with each other to maintain adequate performance. Although currently not required, membership and certification in the operations and maintenance of collection systems provided by the California Water Environment Association is available. Membership into such programs allows access to information regarding regulations, training, and safety. Updates to procedures or regulations will be conveyed to staff using tailgate training sessions and formal reviews of updated material.

4.6 Equipment Inventory

Maintenance equipment for cleaning and inspection of the collection system is owned and maintained by the District. It is also the responsibility of the District to ensure containment equipment is available. In the event of an emergency and none of the equipment listed below can be utilized, there are several sub-contract agencies that can be contacted to respond; their contact information is provided in **Appendix B.** These agencies are listed in Section 2.03 Names and Telephone Numbers under “Emergency Contractor.”

Critical replacement parts are ordered and kept on hand by the departments in which the equipment is housed. It is the responsibility of the departments to maintain the equipment so that it is kept in good working condition, including California Department of Transportation inspections of vehicles and power testing. **Table 4-1** summarizes the District’s equipment inventory.

Table 4-1 Equipment Inventory List	
Equipment Type	**Supply**
Cleaning	High Pressure Water Spray
	Vactor Truck 2105
Inspection	CCTV inspection company contracted
	Rausch Mobile Pro C 135 System
	Vac-con Hydrostatic Comb Machine
	Rigid NaviTrack Scout Sonde/Line Locator
Containment	Picks and shovels
	Sand Bags
	Spill Response Kit
	2” trash pumps (2)
	3” trash pump
	John Deere Tractor
	Absorbent Material
	Signs and cones
	6-inch portable pump
	Suction hoses for pumps (6”, 3”, and 2”)
	6-inch lay-flat discharge hose (800 feet) 2-inch lay-flat discharge hose (200 feet)

5.0 ELEMENT 5 – DESIGN & PERFORMANCE PROVISIONS

This section fulfills the Design and Construction requirements for both the RWQCB and SWRCB. The District is responsible for reviewing design and construction documents to ensure that all construction projects meet the District's standards. The District is also responsible for updating standards for installation, and rehabilitation and repair, as needed. The District retains the responsibility for inspections of construction projects to ensure District and County standards have been followed.

This element was last updated in June 2025.

5.1 Regulatory Requirements

Element 5 of the SSMP must identify:

- Design and construction standards and specifications for the installation of new SSSs, pump stations, and other appurtenances; and for the rehabilitation and repair of existing SSSs; and
- Procedures and standards for inspection and testing the installation of new sewers, pumps, and other appurtenances and for rehabilitation and repair projects.

5.1.1 Element 5: Trunk Sewer Connection Standard Procedure: Appendix G

- 2022 San Luis Obispo County Public Improvement Standards

Appendix G includes excerpts from the 2022 San Luis Obispo County Public Improvement Standards that are applicable to sanitary sewer and utility design, including standard details for manholes (S-1, S-1a), cleanouts (S-2), service laterals (S-3, S-3a), and main lines (U-1, U-2, U-3a).

5.2 Design and Performance Standards

The San Luis Obispo County's 2014 Public Improvement Standards is used by the District for its "Design and Construction Standards." This document establishes requirements, conditions, and regulations for construction of the District's sewer based upon approval of sewer plans by the District Engineer, recognition of acceptable industry practice, and compliance with the standards set forth therein.

It is in this policy that procedures for inspection and testing installation and repairs of sanitary sewer system structures are also included. Public Improvement Standards, section 7.2.4 "Testing", states that:

"Prior to final approval, all sewer lines a shall be cleaned and tested for leakage by standard hydrostatic or low-pressure air test, for deflection by mandrel test, and for standing water/other debris by TV inspection. All cleaning and testing shall take place after all utilities are installed, and up to, but not including the final paving is completed."

The referenced County Standards can be found at the following link:

San Luis Obispo County 2022 Public Improvement Standards

The referenced District Standards can be found at the following link:

Cambria Community Services District Water and Wastewater Standard Specifications

5.3 Procedures and Standards

The District provides inspections during the construction and repair of sewer facilities along the sewer lines through a licensed inspector. The District's standard procedure requires work to be placed into service only after it is accepted by the General Manager or their delegate following satisfactory inspection and testing.

Inspection and testing requirements for sanitary sewer system components are followed as described by the current version of the San Luis Obispo County 2022 Public Improvement Standards. The sections of the standards utilized by the District are:

- Section 7 – Wastewater Disposal
- Section 8 – Utilities

The District has the authority to enforce inspection and testing of new, rehabilitated, and repaired facilities, as described in SSMP Element 3: Legal Authority, The District currently contracts out inspections.

6.0 ELEMENT 6 – OVERFLOW EMERGENCY RESPONSE PLAN

This section outlines the steps taken in an emergency to respond to, contain, and mitigate SSOs. According to the EPA, an SSO is defined as the unintentional release of untreated or partially treated wastewater from a sanitary sewer system due to a variety of factors, including blockages, equipment failures, or excessive inflow and infiltration. This section also details the procedure for notification of the various agencies, both State and local.

This element was last updated in June 2025.

6.1 Regulatory Requirements

The District will implement a Sanitary Sewer Overflow Response Plan (SSORP) agreement that identifies measures to protect public health and the environment. At a minimum, the plan includes:

- Proper notification procedures so that the primary responders and regulatory agencies are informed of all SSOs in a timely manner;
- A program to ensure an appropriate response to all overflows;
- Procedures to ensure prompt notification to appropriate regulatory agencies and other potentially affected entities (e.g. health agencies, regional water boards, water suppliers, etc.) of all SSO that potentially affect public health or reach the waters of the State. All SSO shall be reported in accordance with the California Water Code, other State Laws, and other applicable RWQCB GWDR or permit requirements. The SSMP identifies the officials who will receive immediate notification;
- Procedures to ensure that appropriate contract staff and contractor personnel are aware of and follow the SSORP and are appropriately trained;
- Procedures to address emergency operations, such as traffic and crowd control and other necessary response activities; and
- A program to ensure that all reasonable steps are taken to contain untreated wastewater and prevent discharge of untreated wastewater to waters of the United States and minimize or correct any adverse impact on the environment resulting from the SSO, including such accelerated or additional monitoring as may be necessary to determine the nature and impact of the discharge.

6.1.1 Element 6 – SSO Packet: Appendix G

Supporting information for Element 6 shall be included in **Appendix G** which consists of the following documents:

- SSO Report Forms – Incident and Telephone Log

6.2 Sewer System Overflow Notification and Reporting

All operating and dispatch staff are to be trained and kept current on the OERP and any subsequent updates. SSO notification procedures vary based on whether the SSO is classified as a Category 1, Category 2, Category 3, or a Private Lateral Sewage Discharges (PLSD). The CIWQS reporting requirements for each category are noted in **Figure 6-1.** After notifying the RWQCB of any SSO, the Wastewater Systems Superintendent or their designated representative should also email RWQCB Staff, Cecile Blancarte: cecile.blancarte@waterboards.ca.gov to confirm that the submitted report was received.

Category 1 SSOs

For any SSO discharge that result in a discharge to a drainage channel or a surface water (including the ocean), or to the County storm drain system and is not fully captured and returned to the sewer system or disposed of properly, the District shall, as soon as possible, but no later than two (2) hours after becoming aware of the discharge, notify the California Governor's Office of Emergency Services (Cal OES) at 1-800-852-7550.

Category 2 SSOs

For any SSO that is 1,000 gallons or greater in volume, which does not discharge to a drainage channel or surface water, the Wastewater Systems Superintendent or their designated representative may email RWQCB Staff, Cecile Blancarte, at cecile.blancarte@waterboards.ca.gov, to notify him of the SSO within 3 business days after becoming aware of the SSO.

Category 3 SSOs

If a SSO occurs due to a problem in the District's sanitary sewer collection system and does not reach a drainage channel, surface water, the County storm drain system, or is fully captured from the County storm drain system and returned to the sewer system or disposed of properly and is less than 1000 gallons in volume, the Wastewater Systems Superintendent or their designee may email RWQCB Staff, Cecile Blancarte, at cecile.blancarte@waterboards.ca.gov to notify him of the SSO within 30 calendar days after the end of the calendar month in which the SSO occurred.

Once the SSO response incident is concluded, Wastewater Department Staff forward the required data to the California Integrated Water Quality System (CIWQS) by visiting the SWRCB database at: http://ciwqs.waterboards.ca.gov and entering on-line the requested information about the SSO. Department staff will also retain a copy of all completed reports about an SSO incident in a folder designated for SSO records.

Private Lateral Sewage Discharges (PLSDs)

The District may voluntarily notify regulatory agencies, such as the RWQCB, of a PLSD. SWRCB encourages notifying Cal OES of a PLSD if the PLSD is greater than or equal to 1,000 gallons with the potential to reach surface water. The SWRCB also encourages notifying the appropriate regulatory agencies (see list of potential agencies in Section 2: Organization) or notifying the responsible party that notification and reporting should be completed as required by Health and Safety Code Section 5410 et. seq. and Water Code Section 13271 if the PLSD is greater than or equal to 1,000 gallons regardless of the SSO destination.

Figure 6-1 CIWQS Reporting Requirements

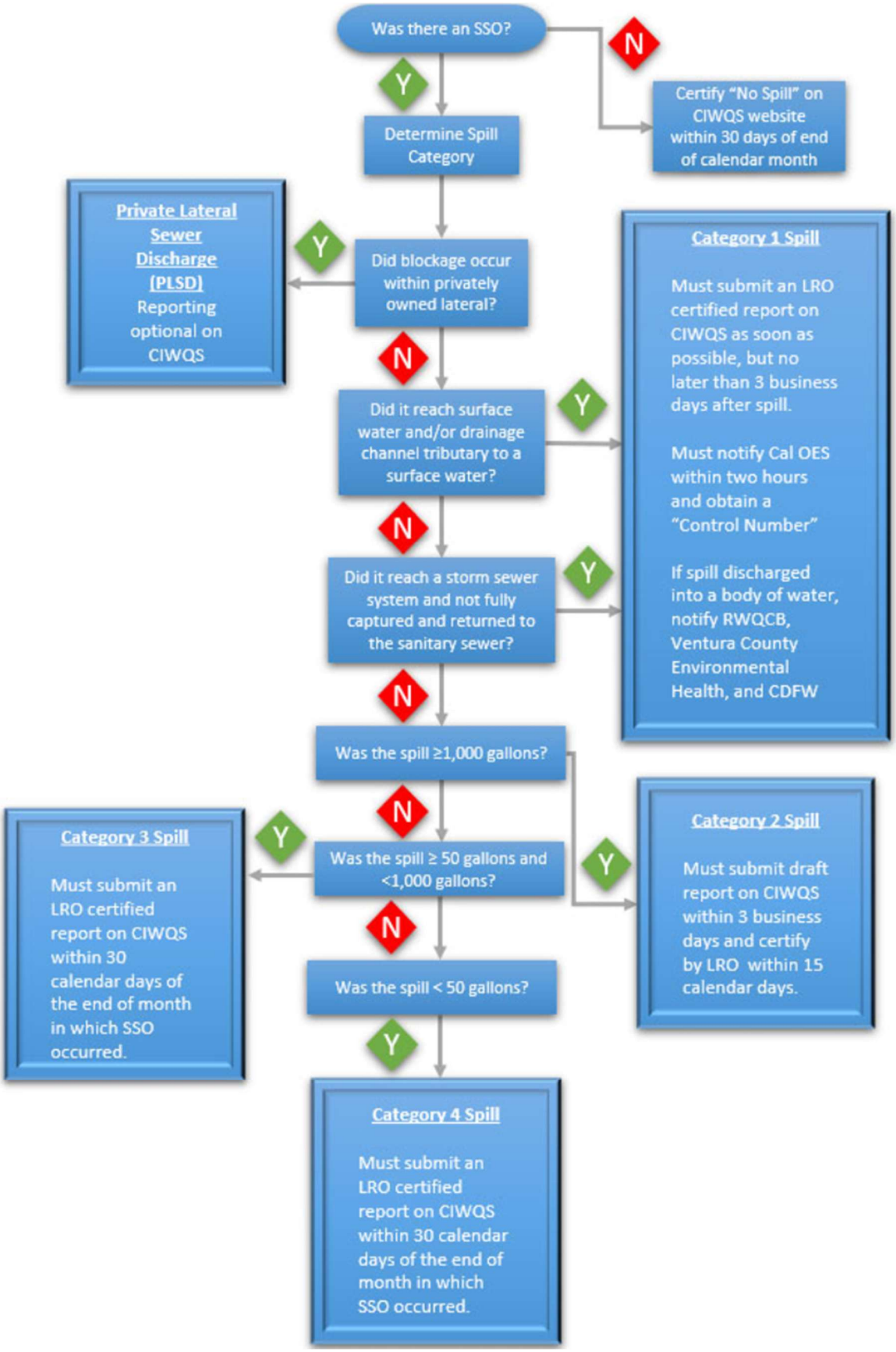

6.3 Sewer System Overflow Response

The District's goal for responding to an SSO during business hours is immediate from receipt of call. The District's goal for responding to SSOs during non-business hours is 45 minutes. The District's on-call person is usually the SSO first responder and is responsible for mitigation, documentation, most reporting, and follow-up. Authorities must be notified within 2 hours of becoming aware of a Category 1 spill.

SSO's Caused by District-Owned Facilities

Upon notification, Wastewater Department staff respond and identify the location of the overflow and its characteristics (i.e. apparent source, volume released, extent, and whether it is on private property etc.). They also determine the potential cause of the SSO and the responsible party. This information is recorded on the SSO Response Form. The most senior wastewater staff member present will assume the duties of onsite incident manager until relieved by the Wastewater Systems Superintendent, Department Supervisor, or their assigned representative.

To ensure containment, wastewater department staff will locate the nearest down gradient (down slope) storm drain and determine if the release has, or will, reach this drain. Based on site conditions, the onsite incident manager decides if immediate action or additional staff or equipment is needed to prevent the release from reaching this drain. If the SSO occurred because of a blockage at a main District sewer line, the onsite incident manager will direct wastewater department staff to immediately contain the discharge by completely berming (including sandbagging closed) the storm drain inlet and to clear the blockage. Once the nature and extent of the discharge are known, staff will begin immediate cleanup of discharges caused by a District-owned pipeline; typically, by vacuuming the discharge with the District's Vactor truck for proper disposal.

The information collected on the SSO response form, along with any other relevant information is reported by Wastewater Staff to all required outside agencies such as the California Office of Emergency Services, the Central Coast Regional Water Quality Control Board, the San Luis Obispo County Department of Health Services, and if applicable, the San Luis Obispo Flood Control and Water Conservation District (see the emergency response contacts table in **Appendix G** for more detail). Staff also ensures the release area (all public areas) are cleaned and disinfected after the normal sewer flow is restored and the blockage relieved. If the release has reached the storm drain system, staff will routinely check a couple of storm drain catch basins downstream from the contaminated catch basin to verify how far the release has traveled down the storm drain line. Depending on the severity of the release, based on the Categorization outlined in **Figure 6-1**, samples may be required to be taken from those catch basins and analyzed for pathogenic organisms. Sampling, if any, is implemented at the discretion of the onsite incident manager and is based on site specific observations. If there is a question about the necessity for sampling, onsite staff are to contact the Central Coast Water Board.

If a release from a District-owned main has visibly impacted private property, the onsite staff will photo document all such impacts identified at the time of the release response. Staff also documents the contact information of the property owner and any notes regarding the potential impact in their field notebook. Questions regarding repair costs are directed to the District's General Manager.

SSOs Caused by Privately-Owned Facilities

If the SSO occurred because of a blockage or other problems within a privately owned lateral line resulting in a discharge to the ground surface and /or into the public right-of-way such as County streets, alleys or

side-walks, wastewater department staff will contain and prevent further discharges into the Public Right-of- Way as described in the preceding District -owned facilities SSO response description. This is typically done by using the department's Vactor truck. District staff will also contact the subject property owner/manager and direct them to immediately contact a private plumber to relieve the sewer blockage.

Should there be no effective response from the property owner or property manager to abate the SSO within a reasonable time frame (less than an hour), or at the discretion of the onsite incident manager, the water service may be temporarily turned off at the subject property after proper notifications are made by calling District Water Department staff and requesting a temporary water service disruption.

Before attempting to turn off the water service, Water Department and Water Utility Billing staff will try to contact the property owner or property manager. Notification is made verbally and by posting a large placard in a common area and a door hanger on each unit or residence/business. Each placard and door hanger will have contact information for the Wastewater Systems Superintendent, Utility Billing, and the San Luis Obispo County Department of Public Health. If possible, door hanger notifications will be placed on each tenant's door depending on access.

6.4 Training

District staff are trained annually in the requirements of the OERP. Training includes review of the OERP in a classroom setting, practice in response to an SSO event, and practice in SSO reporting using SSOR form and CIWQS.

6.5 Traffic and Crowd Control

SSOs often occur where public contact is likely. To minimize the possibility of contact, District staff is trained in the use of basic traffic control equipment, including safety tape and traffic cones, which are available for use in an emergency. The County Sherriff's Department may be contacted to assist with crowd control.

6.6 Sewer System Overflow Impact Mitigation

The OERP includes spill mitigation and cleanup procedures for handling a prolonged SSO situation. The OERP also covers SSO responses for different situations, including wet weather overflows, pump station failures, and force main breaks. Mitigation efforts include instructions for setting up perimeters and control zones to contain SSOs and prevent sewage from reaching surface waters, storm drains, or other sensitive environmental areas. The OERP includes discussion regarding public notification procedures when an SSO has the potential to endanger public health.

The District takes all reasonable steps to contain sewage and prevent sewage discharges to storm drains and minimize or correct any adverse impact on the environment resulting from the SSO, including such accelerated or additional monitoring as necessary to determine the nature and impact of the discharge. Operations staff will use suitable materials, to block catch basin entrances to storm drains and will recover spills that entered the system with the Vactor truck. SSO sites are thoroughly cleaned with appropriate steps for each unique situation.

For mitigation purposes, the SLO Environmental Health Department can provide the District assistance in post-SSOs monitoring. In the event of a Category 1 spill, the Environmental Health Department (EHD)

is notified immediately along with other applicable agencies. The District then utilizes the EHD for the service of monitoring water quality following the SSO. The District will also provide any necessary support, equipment, or Staff as requested to assist in the water quality monitoring.

7.0 ELEMENT 7 – FOG CONTROL PROGRAM

This section of the SSMP describes the FOG Program for the District. The area of concern for FOG is West Village and along Main Street, where there are various restaurants and hotels. The main goal is to decrease the amount of FOG that is entering the sewer system and minimize the risk of SSOs.

This element was last updated in June 2025.

7.1 Regulatory Requirements

Each Agency shall evaluate its service area to determine whether a FOG control program is needed. If an Agency determines that a FOG program is not needed the Agency must provide justification as to why it is not needed. If FOG is found to be a problem, the Agency must prepare and implement a FOG source control program to reduce the amount of these substances discharged to the sanitary sewer system. This plan shall include the following as appropriate:

- An implementation plan and schedule for a public education and outreach program that promotes proper disposal of pipe-blocking substances:
- A plan and schedule for the disposal of pipe-blocking substances generated within the sanitary sewer system service area. This may include a list of acceptable disposal facilities and/or additional facilities needed to adequately dispose of substances generated within a sanitary sewer system service area;
- The legal authority to prohibit discharges to the system and identify measures to prevent SSOs and blockages;
- Requirements to install grease removal devices (such as traps or interceptors) and the development of design standards for such devices, maintenance requirements, Best Management Practice (BMP) requirements, record keeping and reporting requirements;
- Authority to inspect grease producing facilities, enforcement authorities, and whether the District has sufficient contract staff to inspect and enforce the FOG ordinance;
- An identification of sewer system sections subject to FOG blockages and establish a cleaning maintenance schedule for identified sections; and
- Development and implementation of source control measures, for all sources of FOG discharged to the sewer system.

7.1.1 Element 7 – Enhanced Maintenance Areas: Appendix H

- Enhanced Maintenance Areas

7.2 FOG Control Program Discussion and Outreach

The District recognizes the significant impact that FOG can have on the wastewater collection system. To mitigate the risk of blockages and SSOs District has implemented a FOG Control Program aimed at minimizing the introduction of these substances into the sewer system. The program includes regular maintenance practices, such as cleaning sewer lines in areas prone to FOG accumulation, and public education initiatives to inform residents and businesses about proper disposal methods. By proactively

addressing FOG-related issues, CCSD strives to maintain the integrity and efficiency of its wastewater infrastructure.

CCSD's website acts as a form of public outreach and informs residents on how to be more conscious of the substances they send to the sewers.

7.3 Identification of Grease Problem Areas and Sewer Cleaning

One objective of the District FOG control program is to monitor and manage areas within the collection system that may be prone to grease accumulation. The areas of the collection system can be identified as Enhanced Maintenance Areas (EMA) due to high solids loading, heavy root growth, or irregularities, in the system are tracked using a computerized maintenance program. EMAs are categorized based on need into Monthly, Quarterly, Semi-Annual, and Annual work orders that are printed out monthly. Reports can be generated from the computer system to reflect what areas have been cleaned and what areas are due for cleaning. As each EMA work order is completed, it is entered into the computer system to reflect what areas have been cleaned and what areas are due for cleaning. As each EMA work order is completed, it is entered into the computer system and the time is reset automatically to eh appropriate number of days when it will be due for maintenance again, ranging from 30 to 365 days. There are currently seven EMAS that have been identified – these areas are cleaned and maintained on a regular basis.

The list of EMAs and their exact locations are listed in **Appendix H**. The District also keeps Operation Maintenance Logs for force main valves, lift stations, sewer lines, and sewer manholes. The District also promotes public education regarding proper grease disposal practices within the community. As a preventative measure, the District maintains a routine cleaning schedule for its sewer lines and increases maintenance frequency in areas where FOG-related issues are identified. Information on routine cleaning and maintenance practices is provided in Element 4: Operations and Maintenance.

The District requires that any grease removal device must:

- Be readily accessible for cleaning and inspection
- Operated and maintained by the owner at owner expense
- Ensure contents of material do not exceed twenty-five (25) percent of the grease trap or interceptor capacity
- Documents of grease trap and/or interceptor activity must be maintained by the owner or their representative and made available to Cambria CSD representatives upon request, at the owner's own expense.

The District has determined that there is a need for a FOG Source Control Program, Inspections are performed at minimum on an annual basis which will include the following implementation:

- Verify that an approved FOG device is present at the facility in accordance with the Municipal Code
- Verify that device is adequately sized for application
- Evaluate the condition of the grease trap. Determine that the pumping frequency is sufficient

- Review waste grease disposal practices with each user
- Enforce non-complying users

7.4 Legal Authority

The District has established legal authority to regulate and control the discharge of FOG into its wastewater collection system. This authority is codified in the District Municipal Code, which outlines prohibitions and requirements related to wastewater discharges.

Specifically, Municipal Code Section 5.04.160 prohibits the discharge of substances that can interfere with wastewater treatment processes, including FOG. Section 5.04.170 grants the General Manager the authority to prohibit discharges that may harm the sewer system or constitute a public nuisance. Additionally, Section 5.04.180 allows the General Manager to limit discharges that may have deleterious effects on the wastewater works or cause the District to violate discharge requirements.

These provisions empower the District to enforce measures aimed at preventing FOG-related blockages and SSO's. The District may require the installation of grease interceptors or separators at the user's expense when deemed necessary for the proper handling of liquid wastes containing grease. Furthermore, the District can mandate that such devices be adequately maintained to ensure compliance with ordinance requirements.

Through these legal mechanisms, the District upholds its commitment to protecting the integrity of its wastewater infrastructure and ensuring compliance with applicable environmental regulations.

8.0 ELEMENT 8 – SYSTEM EVALUATION, CAPACITY ASSURANCE, AND CAPITAL IMPROVEMENTS PLAN

This section discusses the evaluation and capacity enhancement of the collection system. Element 8 also discusses design criteria used and steps taken to correct any deficiencies found in the evaluation. It also describes the District programs that have been completed, are being performed and are scheduled to be performed as part of the ongoing evaluation to provide adequate hydraulic capacity in the wastewater collection system.

This element was last updated in June 2025.

8.1 Regulatory Requirements

The requirements for the System Evaluation and Capacity Assurance element of the SSMP are summarized below.

- Evaluation: Actions needed to evaluate those portions of the SSS that are experiencing or contributing to an SSO discharge deficiency. The evaluation should provide estimates of peak flows associated with conditions similar to those causing overflow events, estimates of the WWTP's key system components, hydraulic deficiencies (including components of the system with limiting capacity) and the major sources that contribute to the peak flows associated with overflow events;
- Design Criteria: Where design criteria do not exist or are deficient, undertake the evaluation identified above to establish appropriate design criteria; and
- Capacity Enhancement Measures: The steps needed to establish a short- and long-term CIP to address identified hydraulic deficiencies, including prioritization, alternatives analysis, and schedules. The CIP may include increases in pipe size, I/I reduction programs, increases and redundancy in pumping capacity, and storage facilities. The CIP may include an implementation schedule and may identify sources of funding.
- Schedule: The District will develop a schedule of completion dates for all portions of the CIP developed in the bullet points above. This schedule may be reviewed and updated consistent with the SSMP requirements as described by the SWRCB GWDR.

8.1.1 Element 8 – Capital Improvement Plan: Appendix I

- List of Anticipated and Completed Wastewater Projects since 2018

8.2 System Evaluation and Condition Assessment

The General Waste Discharge Requirements detail the guidelines necessary to document the existing collection system evaluation to ensure that sufficient hydraulic capacity exists in the system for dry and wet weather flows to prevent a sanitary sewer overflow (SSO). A summary of the minimum requirements

that must be addressed in this section according to the General Waste Discharge Requirements (GWDR) guidelines are listed here for reference.

General Waste Discharge Requirements (GWDR) Element 8 – System Evaluation and Capacity Assurance Plan:

The GWDR requirements for the System Evaluation and Capacity Assurance Plan are: The collection system agency shall prepare and implement a capital improvement plan that will provide hydraulic capacity of key sanitary sewer system elements for dry weather peak flow conditions, as well as the appropriate design storm or wet weather event. At a minimum, the plan must include:

Evaluation: Actions needed to evaluate those portions of the sanitary sewer system that are experiencing or contributing to a sanitary sewer overflow (SSO) discharge caused by hydraulic deficiency. The evaluation must provide estimates of peak flows (including flows from SSOs that escape the system) associated with conditions similar to those causing overflow events, estimates of the capacity of key system components, hydraulic deficiencies (including components of the system with limiting capacity) and the major sources that contribute to the peak flows associated with overflow events.

Design Criteria: Where design criteria do not exist or are deficient, undertake the evaluation identified in the Evaluation requirement above to establish appropriate design criteria.

Capacity Enhancement Measures: The steps needed to establish a short- and long-term Capital Improvement Plan (CIP) to address identified hydraulic deficiencies, including prioritization, alternatives analysis, and schedules. The CIP may include increases in pipe size, I/I reduction, increases and redundancy in pumping capacity, and storage facilities. The CIP shall include an implementation schedule and shall identify sources of funding.

Schedule: The Agency shall develop a schedule of completion dates for all portions of the capital improvement program developed above in Evaluation, Design Criteria, and Capacity Enhancement Measures requirements. This schedule shall be reviewed and updated consistent with the SSMP review and update requirements as described in Section D.14 (of the GWDR). The criteria outlined are discussed in greater detail in the following sections.

8.2.1 System Evaluation

Actions needed to evaluate those portions of the sanitary sewer system that are experiencing or contributing to a sanitary sewer overflow (SSO) discharge caused by hydraulic deficiency. The evaluation must provide estimates of peak flows (including flows from SSOs that escape the system) associated with conditions similar to those causing overflow events, estimates of the capacity of key system components, hydraulic deficiencies (including components of the system with limiting capacity) and the major sources that contribute to the peak flows associated with overflow events.

Planning for the District collection system was commissioned by County Public Works prior to the formation of the District. This lead to the completion of the two primary sewer system assessment districts (AD-1 and AD-2) composing about 80 percent of the current system. Since that original planning effort, the District has strongly encouraged water conservation, which has substantially lowered the amount of baseline dry weather flow into the collection system. The District has also been in a development moratorium for the past 18 years. Therefore, very little development has been occurring and the collection system has not been significantly expanded.

The District retained an engineering firm in 1992 to evaluate the collection system, which was driven by concerns over too little flow being introduced into the system. The 1992 study identified the following recommendations as an initial capital improvement program:

- Identify existing manhole covers that have been paved over and bring them to grade
- Re-establish access to manhole structures that are within easements and expand existing easements for accessibility. Perform an analysis of the manholes to ensure their structural condition.
- Establish a budgeted, scheduled system cleaning program to address root intrusion and other potential maintenance issues.
- Perform grease trap inspections as part of a system wide fats, oils and grease program.
- Perform a system wide CCTV inspection.
- Adopt collection system design and inspection standards.
- Perform an annual hydro-cleaning of the collection system trunk lines.
- Protect identified lift stations from inflow that are adjacent to a creek through manhole lid liners or raising the manhole cone.
- Decrease pump cycling at specific lift stations by adjusting the level switches.
- Clean identified lift stations and force mains on a regular basis to reduce odor complaints in the collection system.
- Correct inaccessible emergency generator power inlet at Lift Station B-1.
- Establish communication to link Pump Station 8.
- Inspect identified pipelines for misaligned joints in Gleason area.
- Repair/replace existing air release valves.
- Install wet well coating system on identified lift stations.
- Correct misaligned joints and gaps in collection system pipelines.
- Correct damaged/broken manhole rings.
- Purchase numerous equipment items for the proper maintenance of the collection system.

Most of the repair recommendations above have since been completed, or else migrated into a recommended annual budgeting process for completion based on available funding resources. Most of the District collection system needs involve replacing and updating very old lift stations. The majority of the stations were constructed with separate dry wells and wet wells, which require confined space entry for close-up inspection of pumps. Long-term, the District would eventually like to replace the older stations with new stations using submersible pumps to avoid, or otherwise minimize confined space entry

requirements. In more recent times, a 2013 report by Phoenix Engineering assessed the condition of the remote lift stations.

The District has a standing Infrastructure Committee and Finance Committee tasked with oversight of the capital improvement program, including collection system needs, as well as determining how to finance such project needs. This is an ongoing process, which involves Board members as well as local citizen participation.

The following improvements have been made to the wastewater collection system since the last 2018 SSMP was adopted:

- Fiscal Year 2019-2020
  - Lift Station A-1 Motor Control Center Improvements
  - SCADA Improvements
  - Purchase of a new Vac-Con combination sewer cleaning truck
- Fiscal Year 2021-2022
  - Replaced 175 manhole covers with sealing Pamrex covers
- Fiscal Year 2022-2023
  - Located and repaired a broken section of sewer main
  - Repaired two (2) major root intrusion locations
  - Located and repaired a sunken wye
  - Replaced six (4) manhole covers with sealing Pamrex covers
  - Installed a new lift station controls and motors
- Fiscal Year 2023-2024
  - Replaced ten (10) manhole covers with Pamrex covers
- Fiscal Year 2024-2025
  - Replaced two (2) manhole covers with Pamrex covers

8.3 Capacity Assessment and Design Criteria

To continue to confirm that there are no capacity-related issues or to correct any existing restrictions in the existing collection system, the District has completed the following since the previous SSMP:

- Approximately 90% of the collection system has been cleaned, with CCTV inspections performed on 10% of the system each year. Areas requiring repair are identified and scheduled for maintenance as needed.

- Continue to implement the existing adopted FOG ordinance and develop/execute the annual inspection program.

- A formal wastewater collection system assessment plan has not yet been developed. However, areas of potential infiltration and inflow are identified by comparing high-groundwater areas with the sewer system map, and targeted CCTV inspections are performed. Manholes located within drainage paths are scheduled for sealing cover replacements.

- Pertinent flow data at the District lift stations is regularly compiled and reviewed to determine the following flow parameters: average dry weather flow (ADWF), peak dry weather flow (PDWF) and peak wet weather flow (PWWF). No significant growth is anticipated, and existing system capacity remains sufficient to accommodate current and projected flows.

- To assess the potential impacts from future undeveloped tracts or annexations being considered for sewer service, the development a hydraulic model of the District's collection system has been initiated to compute flows at susceptible (hot spots) and representative locations (critical collection system basin outlets, intermediate lift stations, and major trunk lines) based on area and land use type. A flow and loading study conducted as part of a feasibility assessment for treating wastewater from San Simeon will drive the development and calibration of the model.

- Flow monitoring under dry and wet weather conditions has not yet been conducted; however, past studies and observations have not identified any hydraulic deficiencies within the collection system.

8.3.1 Design Criteria

❖ Element 5 – Design & Performance Standards

8.4 Prioritization of Corrective Action

Annual cleaning and associated CCTV inspections will be used to determine where future improvements and replacements may be needed. Because of the level of conservation occurring, the consequent lack of flow entering the collection system during dry weather, and lack of any appreciable growth, the District should focus on removing wet weather infiltration and inflow sources as well as updating and/or replacing existing facilities. After the system-wide smoke testing was completed, in parallel with CCTV inspections and operator knowledge and inspections, the District regularly performs the following tasks:

- Review is ongoing of previous CCTV tapes, reports, studies, and physical properties of the existing collection system, such as pipe size, pipe slope, and collection area and determine areas most susceptible to hydraulic deficiencies and/or sources of infiltration and inflow. No areas of hydraulic deficiency are known to exist. Possible sources of infiltration and inflow are investigated on a case-by-case basis.

- Annual preparation and update of a prioritized capital improvement program is ongoing, and is based on the CCTV inspections, manhole inspections, and historical recommendations. This list as well as its funding needs will be reviewed each year with the District's standing Infrastructure and Financing Committees as part of the annual budgeting process.

- An improvement project list has been created for the CY 2025, and the implementation of the short-term CIP projects is ongoing.

- Review and update of lift station information based on the 2013 assessment study, annual CCTV inspections, and any subsequent replacements or improvements is ongoing; no new lift station assessment has been conducted since 2013.
- Development and update of a prioritized listing of collection and lift station projects with budgetary estimates for short-term and long-term CIP projects is ongoing.
- Should future development be proposed, such as allowing demands beyond existing infill or service boundaries, or significant changes in use that may increase system demand, the District will adopt a policy and/or project approval conditions requiring that development and redevelopment project proponents evaluate the offsite capacity impacts of their project through an engineering study and commit to providing any necessary off-site improvements as part of the project approval process to accommodate the potential flow increase and avoid hydraulic capacity issues.

Three years of sewer rate increases occurred in 2018, 2019, and 2020. A rate study was completed in March 2022, and the recommended rates were adopted in 2022, 2023, and 2024. As of July 12, 2025, Cambria CSD has enacted an inflationary adjustment to its sewer service rates under Resolution 28-2025, consistent with provisions adopted in 2022. The most recent rate increase was $0.63, which follows the previously approved multi-year rate structure, representing a modest inflation-based escalation from the prior year's rate. These annual adjustments are designed to ensure that revenue remains sufficient to support operating costs, maintenance, and critical capital improvement needs.

Capital improvement project design can be started following a Proposition 218 approval process. Because of the lack of CCTV information beyond the 2013 completed CCTV and cleaning, 10% of the collection system will be cleaned and internally video inspected annually to identify future needs. In addition, high priority areas, such as areas with high groundwater tables or in proximity of drainage swales and creeks, will be given a higher priority for inspection and cleaning to facilitate the reduction in infiltration and inflow. Repair, replacement, and projects to reduce infiltration and inflow will be funded through wastewater customer rates. Any future projects to increase capacity will be funded from future impact fees paid by development. Any future customer rate increases to fund projects will be subject to the successful completion of a Proposition 218 process.

8.5 Capital Improvement Plan

Appendix I contains the current listing of the District's proposed Capital Improvement Plan (CIP) projects by year. The CIP program is periodically reviewed by the District's standing Infrastructure and Finance Committees as part of the District's annual budgeting process. When the need for a rate increase is identified, the District typically forms a rate ad-hoc committee and commissions a rate consultant to help navigate and facilitate the Prop 218 process.

9.0 ELEMENT 9 – MONITORING, MEASUREMENT, AND PROGRAM MODIFICATIONS

This section of the SSMP discusses monitoring, measurement and program modifications employed by the District. The District may prepare and implement program modifications as appropriate to address deficiencies, or as a preventative measure for improving the overall collection system. This section fulfills the Monitoring, Measurement and Program Modification requirements for both the RWQCB and SWRCB.

This element was last updated in June 2025.

9.1 Regulatory Requirements

The District shall:

- Maintain relevant information that can be used to establish and prioritize appropriate SSMP activities;
- Monitor the implementation and, where appropriate, measure the effectiveness of each element of the SSMP;
- Assess the success of the SSMP;
- Update program elements, as appropriate, based on monitoring or performance evaluations; and
- Identify and illustrate SSO trends, including frequency, locations, and volume.

9.1.1 Element 9 – Monitoring, Measurement & Program Modification: Appendix H & J

Supporting information for Element 9 is included in **Appendix H & J** which contains the following documents:

- Enhanced Maintenance Areas
- Manhole Inspection Form

9.2 Monitoring and Measurement

The District is committed to the ongoing monitoring and assessment of its sanitary sewer system operations to maintain reliable service and protect public and environmental health. Regular tracking of system performance, maintenance activities, and sanitary sewer overflow (SSO) data enables the District to evaluate the effectiveness of its Sewer System Management Plan (SSMP) and identify areas for improvement. This section outlines the procedures, tools, and tracking systems utilized by the District to monitor system conditions, maintenance frequencies, and program effectiveness. The collected data provides the foundation for making informed operational decisions and guides modifications to system operations and maintenance practices as needed.

Annual Sewer Line Cleaning and Closed-Circuit Television Inspection

It is the responsibility of the District to clean and video ten percent (10%) of approximately fifty-nine (59) miles (62,304 feet) of the entire gravity system once every year. All findings will be reported to the District General Manager. Cleaning is tracked using a preventive maintenance program, “Diamond Maps,” and data on the water and sewer system is visualized on “Diamond Maps.” Notes and observations from each section are evaluated with District staff to determine areas that need to be addressed and prioritize for maintenance or repair.

Annual, Semi-Annual, Quarterly, and Monthly Hot Spot Cleaning

There are currently seven (7) “Enhanced Maintenance Areas” in the District Collection System that have been identified (See **Appendix H**). Upon determination of such areas, they will be tracked using the computer-based maintenance program, “Diamond Maps.” his system will be maintained by District staff. “Enhanced Maintenance Areas” will be categorized based on need into Monthly, Quarterly, Semi-Annual, and Annual work orders that are printed out monthly. Reports can be generated from “Diamond Maps” to reflect what areas have been cleaned and what areas are due for cleaning. As each “Enhanced Maintenance Areas” work order is completed, it is entered into the computer system and the time is reset automatically to the appropriate number of days when it will be due for maintenance again, ranging from 30 to 365 days. This frequency can be adjusted based on operator observations, staff evaluation and from information gathered after CCTV inspections.

Manhole Inspections

The District will perform manhole inspections during the annual Collection System cleaning. Using the form in **Appendix J** inspectors can rate the condition and inform the District of repair priority in a quarterly report. Manhole inspections include documentation that is entered into the District preventative maintenance program and will include a color photo of each manhole.

Sanitary Sewer Overflows

Sanitary Sewer Overflow events are reported to the California Integrated Water Quality System (CIWQS) and tracked using the website. The Wastewater Wastewater Systems Superintendent reports to the General Manager on a monthly and quarterly basis the amount of overflow events along with the cause of each event. This information is used to determine the need and priority of repair and maintenance.

Odor Response

District Staff tracks odor complaints and reports any findings on a monthly and quarterly basis. A Standard Operating Procedure for responding to an odor complaint is followed and complaints documented in “Diamond Maps.”

9.3 Identifying Trends

The preventative maintenance program developed by the District within “Diamond Maps” demonstrates a trend in reduced service callouts due to blockages and structural failures over a specific period. Upon complete implementation of the preventative maintenance program comparisons should be made on a month to month basis with a quarterly and annual trend to indicate effectiveness.

SSOs shall be tracked as frequently as monthly to collect and compare data. By tracking location of overflows, the frequency in which they occur, and the magnitude of each, staff has been able to identify what areas are at most risk and plan for advanced action such as repair or replacement. There are several causes of sanitary sewer overflows that are tracked within the CWIQS system including grease, roots,

sags, or line breaks. Each cause requires a specific corrective action such as increased cleaning, application of root control, or pipe lining.

By illustrating sanitary sewer overflow trends, determinations can be made by staff of where the more immediate needs are in the system. It could at anytime be determined that current maintenance practices are not proving to be effective enough and planned maintenance may be modified.

9.4 SSMP Updates

During the monitoring and assessment of the District's Sanitary Sewer Management Program, it may be determined that certain elements are not effective. If preventative maintenance such as sewer line cleaning or "Enhanced Maintenance Areas" cleaning does not result in a reduction in service callouts, the frequency of such cleaning may be increased. If an increase in cleaning frequency does not decrease the amount of service callouts then an implementation of an alternate program element shall be enacted, such as a spot repair or depending on severity, complete sewer replacement. It may also be determined that certain program elements are not monitoring the appropriate data needed. Specifics in inspections may indicate that additional data should be tracked. Trending may indicate other factors contributing to problems in the sewer system that have not historically been tracked, causing modifications to the program. These modifications or updates should be added to the program in an organized manner and documented within the Sanitary Sewer Management Program.

10.0 ELEMENT 10 – SSMP AUDITS

This section discusses and outlines the procedure for conducting audits of the SSMP. These audits ensure the SSMP programs are implemented as intended. This element will include a Gap Analysis form and will identify individuals to perform the audits.

This element was last updated in May 2018.

10.1 Regulatory Requirements

As part of the SSMP, the District shall conduct periodic internal audits, appropriate to the size of the system and number of SSOs. At a minimum, these audits must occur every two years and a report must be prepared and kept on file. This audit shall focus on evaluating the effectiveness of the SSMP and the Agency's compliance with the SSMP requirements including identification of any deficiencies in the SSMP and steps to correct them. At a minimum, audits will occur every two (2) years.

10.1.1 Element 10 – Internal Audits: Appendix K

10.2 SSMP Audit Procedure

To determine the effectiveness and compliance of the developed Sanitary Sewer Management Program, periodic internal audits shall be performed at a minimum of every two years. The audit shall be conducted using the form contained in this section and results kept on file for review.

11.0 ELEMENT 11 – COMMUNICATION PLAN

This section discusses the communication program employed by the District. This communication includes with the public as well as the regulatory agencies. It provides multiple opportunities for interested parties to provide the District with input as the SSMP and associated programs are being developed.

This element was last updated in June 2025.

11.1 Regulatory Requirements

The District shall communicate on a regular basis with the public on the development, implementation, and performance of its SSMP. The communication system shall provide the public the opportunity to provide input to the District as the program is developed and implemented.

11.1.1 Element 11 – Communication Plan: Appendix L

- Record of Training

11.2 Communication Program

Billing

The District can notify the community of Cambria on activities related to the Sanitary Sewer Management Program in the monthly billing sent for Water, Sewer, and Solid Waste. Comments can be added directly to the bill such as preventative measure reminders. If a greater amount of information is to be relayed to the Public, a flyer could be sent in the mail either included in the direct billing or individually.

Direct Mailers

If a greater amount of information is to be relayed to the Public, a flyer could be sent in the mail either included in the direct billing or separately. It is advisable that mailers go out before food related holidays that reminds the Public of how to properly dispose of grease. Other mailers may be sent only to specific neighborhoods to inform residents of maintenance activities that may affect them.

Newspaper Announcements

For large community sewer cleaning activities, the Public should be notified by publishing an announcement in the local newspapers. The community of Cambria has the, “Telegram Tribune”, and the “Cambrian Newspaper”. Any changes to the Sanitary Sewer Management Program shall be published in the local newspapers as well.

Public Service Announcements

Public service announcements to notify the public of any Public Works activities or measures can be broadcast on local radio stations. It is important to be able to reach the Public through all demographics and these announcements should be broadcast in Spanish as well as English.

Cambria CSD Website

The District has developed a working website (cambriacsd.org) to inform the Public of the activities going on within the District. It is updated regularly and can be used to inform the Public of the progress on sewer management activities. There are tabs that can direct the public to phone numbers and hotlines they can contact for further questions.

Cambria CSD Standing Infrastructure Committee, Finance Committee, and Board of Director Meetings

The District has two Board members and three appointed local citizen members on each of its standing committees. The standing committees are subject to the same Brown Act compliance notifications and rules as the regular District Board meetings. The committees meeting days vary from month to month and are subject to the availability of committee members. The District typically holds regular Board meetings on the fourth Thursday of every month beginning at 2:00 p.m. at the Cambria Vets Hall. The meetings are videotaped, and a DVD format is available for check out. Minutes are recorded at each meeting and can be made available upon request. Most regular Board meetings are televised on the local public television station as well as streamed on the local C-Span webcast service. Subject to the Brown Act and the posted agenda, the public meetings provide an opportunity for Board Members and Staff, as well as the Public, to address any concerns about the Sanitary Sewer System.

Interactions with the Public

The District Facility Maintenance Crews will be routinely trained in how to deal with the Public when working in the Collection System. Crews are instructed to secure the Public safety and health. When the Collection System Crew is approached by the Public they use that opportunity to educate the Public on proper maintenance and preventative measures that everyone can take to care for the system. During inspections of infrastructure such as Grease Traps, inspectors hand out materials to inform the Public of proper sewer maintenance and explain why it is important to prevent damage to the Collection System.

Communication Within the Agency

It is important that all channels of communication between District Staff, Maintenance Crews, and System Personnel are understood. By following the procedures set forth in this program there should be a clear process in which communications are relayed and received. Inspection Reports, evaluations and reviews, change forms, and system updates should be turned into the appropriate officials that can process these pieces of data and follow up with the proper personnel. District Staff should be able to use the Sanitary Sewer Management Program to address any system concerns, track changes, and standardize procedures.

11.3 Staff Training and Communication

The District prioritizes consistent communication and ongoing training for all personnel involved in the planning, operation, maintenance, and management of the sanitary sewer system. Staff are kept informed of updates to policies, procedures, and regulatory requirements through regular meetings, safety tailgate sessions, and formal training opportunities. The District encourages open communication between departments to support safe, efficient, and coordinated system operations. Training ensures that employees remain knowledgeable about best practices, safety protocols, and emergency response procedures, fostering a proactive approach to maintaining system reliability and protecting public health.

Appendix A

SSMP Schedule & Board Meeting Minutes

Sewer System Management Plan Schedule

Cambria Community Services District

Main Task / Sub-task	Actions	Date / Status
(i) SSMP Development Plan and Schedule	**Initial plan on how the agency intends on developing and implementing their SSMP.**	
District Board certification of Development Plan and Schedule	Present SSMP Development plan to District Board for approval.	Not Completed/Completed/Already in Place Date:
(ii) Goals – Ele 1	**The goal of the SSMP is to provide a plan and schedule to properly manage, operate and maintain all parts of the sanitary sewer system.**	
SSMP Goal	Stated goals for SSMP	Not Completed/Completed/Already in Place Date:
(iii) Organization – Ele 2	**Names and contract staff positions responsible for developing and implementing the SSMP.**	
Organizational chart	Develop organizational chart of management, administration and maintenance personnel.	Not Completed/Completed/Already in Place Date:
SSO Chain of Communications	Develop the internal chain of communications for reporting SSO's	Not Completed/Completed/Already in Place Date:
(iv) Legal Authority – Ele 3	**Agency's legal authority to operate and maintain its sewage collection system.**	
Ordinance development for preventing prohibited discharges	SSLOCSD Resolution 22 A SSLOCSD Pretreatment Ordinance 1994-1	Not Completed/Completed/Already in Place Date:
Ordinance development requiring proper design and construction	SSLOCSD Resolution 22 A	Not Completed/Completed/Already in Place Date:
Ordinance development requiring inspections during and following construction	SSLOCSD Resolution 22 A SSLOCSD Pretreatment Ordinance 1994-1	Not Completed/Completed/Already in Place Date:
Ordinance development for the limiting of the Fats, Oils & Grease	SSLOCSD Fats, Oils, and Grease Ordinance	Not Completed/Completed/Already in Place Date:
Ordinance development to enforce violations	SSLOCSD Resolution 22	Not Completed/Completed/Already in Place Date:
(v) Operation and Maintenance Program– Ele 4	**Collection System operations program and procedures.**	

Mapping	Up to date mapping of the sewage collection system facilities.	Not Completed/Completed/Already in Place Date:
Mapping updates	Develop procedures for maintain mapping data.	Not Completed/Completed/Already in Place Date:
Preventative Maintenance Program	Develop a written description of the preventative maintenance activities the District employs.	Not Completed/Completed/Already in Place Date:
Pipeline maintenance	Develop a schedule for line cleaning and maintenance.	Not Completed/Completed/Already in Place Date:
Pumping and other facilities	Develop a schedule for maintenance of pumping and other facilities.	Not Completed/Completed/Already in Place Date:
Problem areas	Identify problem areas *high maintenance areas: HMA and develop procedures for their maintenance.	Not Completed/Completed/Already in Place Date:
Rehabilitation and replacement program	Develop a short and long term plan for the rehabilitation of replacement of piping due to system deficiencies, including funding (CIP).	Not Completed/Completed/Already in Place Date:
Inspection Program	Develop a program and schedule for the regular visual inspection of the system.	Not Completed/Completed/Already in Place Date:
Inspection Schedule	Develop a schedule for ongoing inspection of the entire collection system.	Not Completed/Completed/Already in Place Date:
Work orders	Develop a system to track and schedule all maintenance activities.	Not Completed/Completed/Already in Place Date:
Equipment and parts inventory	Develop an inventory of equipment and replacement parts.	Not Completed/Completed/Already in Place Date:
Critical parts	Develop an inventory of critical replacement parts including procedures for acquisition.	Not Completed/Completed/Already in Place Date:
(vi) Design and Performance Provisions – Ele 5	**Develop and implement the Capital Improvement Plan that will provide for equipment and system replacements.**	
Design standards	Develop and/or adopt design and construction standards and specifications for the installation of new sewer systems.	Not Completed/Completed/Already in Place Date:
Inspection and testing standards	Develop and/or adopt procedures and standards for inspecting and testing	Not Completed/Completed/Already in Place Date:

(vii) Spill Emergency Response Plan – Ele 6	**Written procedures defining how the District responds to SSO's**	
Overflow response procedures	Develop standard operating procedures for SSO response.	Not Completed/Completed/Already in Place Date:
Notification procedures	Develop notification procedures to ensure all required regulators (and others) are properly and timely notified of an SSO event.	Not Completed/Completed/Already in Place Date:
Emergency response training	Develop and implement Emergency Response Training Program for contract staff or contractors, if utilized.	Not Completed/Completed/Already in Place Date:
Traffic and crowd control	Develop procedures for traffic and crowd control to be utilized during an SSO event.	Not Completed/Completed/Already in Place Date:
Monitoring and sampling	Develop procedures for monitoring and sampling, if required, for an SSO event.	Not Completed/Completed/Already in Place Date:
Follow-up	Develop procedures for following up on an SSO event, including investigation for the cause or responsible party.	Not Completed/Completed/Already in Place Date:
(viii) Sewer Pipe Blockage Control Program – Ele 7	**Prepare and implement a FOG Control Program to reduce the amount of these substances from being discharged into the collection system**	
Identification of Grease Problem Areas	Evaluate system to determine if FOG related problems exist.	Not Completed/Completed/Already in Place Date:
FOG Program	Develop a program to reduce and/or eliminate FOG related sources.	Not Completed/Completed/Already in Place Date:
Public outreach	Develop an appropriate public education, outreach program and marketing materials designed to assist in the reduction of FOG.	Not Completed/Completed/Already in Place Date:
Legal Authority	Develop a list of authorized parties for enforcing sewer pipe blockage control.	Not Completed/Completed/Already in Place Date:
High Maintenance Areas	Develop and implement a inspection program of high maintenance areas.	Not Completed/Completed/Already in Place Date:
(ix) System Evaluation, Capacity Assurance, and Capital Improvements Plan– Ele 8	**Evaluate current capacity of collection system and provide solutions to areas with needed improvement.**	
Inflow and infiltration (I&I)	Develop procedures to detect and remediate I&I problems.	Not Completed/Completed/Already in Place Date:

Identify deficiencies	Identify areas of the system that exhibit capacity deficiencies.	Not Completed/Completed/Already in Place Date:
Analyze defects	Analyze and prioritize repairs/replacement of pipeline defects.	Not Completed/Completed/Already in Place Date:
Capital Improvement Projects	Annual planning	Not Completed/Completed/Already in Place Date:
(x) Monitoring, Measurements and Plan Modifications – Ele 9	**The ongoing evaluation of the performance of the SSMP document and it's ability to achieve its stated goals.**	
Data management	Develop procedures for accumulating and analyzing system maintenance, repairs, projects, reductions of SSO's, and any other pertinent data.	Not Completed/Completed/Already in Place Date:
Program Effectiveness	Develop procedures, report, etc. to measure the effectiveness of the SSMP.	Not Completed/Completed/Already in Place Date:
Program changes	Develop procedures to initiate changes, enhancements, or correct deficiencies in the SSMP.	Not Completed/Completed/Already in Place Date:
(xi) Internal Program Audits – Ele 10	**Program audits are required every two years following the adoption of the final SSMP (August 2, 2011). Audits shall document the success of the SSMP and improvements made to it.**	
Document control	Develop procedure for SSMP document control.	Not Completed/Completed/Already in Place Date:
Key individual(s)	Identify key individual(s) responsible for the SSMP audit (every 2 years). Development of an SSMP Adhoc Audit team consisting of local agencies for peer review and direction.	Not Completed/Completed/Already in Place Date:
Checklist	Develop a checklist to assist and ensure the SSMP is in compliance and effective.	Not Completed/Completed/Already in Place Date:
Reports	Develop reports to assist with analyzing the effectiveness of the SSMP.	Not Completed/Completed/Already in Place Date:
Milestones	Develop milestones (time, events, etc.) that denote program review.	Not Completed/Completed/Already in Place Date:
(xii) Communication Program – Ele 11	**The communication program in the District's outreach to the community and satellite contributors about the public collection system and the SSMP document.**	

Public outreach	Develop a protocol for soliciting and responding to public input.	Not Completed/Completed/Already in Place Date:
Staff SSMP awareness	Develop a program to ensure contract staff awareness of SSMP procedures, protocol, etc.	Not Completed/Completed/Already in Place Date:
FINAL SSMP CERTIFICATION	**Final SSMP document, after all elements have been developed, documented, and implemented.**	
Review by District Attorney	Review of completed SSMP by the legal counsel.	Date/Status:
Adoption/Certification of SSMP by District Board	Adoption and certification of final SSMP document by District's governing body.	Date/Status:
SSMP Update 2009	Initial Release of SSMP	Date/Status:
SSMP Update 2011	Revision of each element of SSMP based on SWRCB inspections March 7, August 11, and December 19, 2010.	Date/Status:
SSMP Update 2014	Revision #3 of SSMP	Date/Status:
SSMP Update 2024	Updated in compliance with State Water Resources Control Board – General Order for Sanitary Sewer Systems effective June 5, 2023.	Date/Status:
Adoption/Certification of SSMP by District Board	Adoption and certification of final SSMP document by District's governing body.	Date/Status:

Appendix B

District Staff & Organization

CCSD Board Members

Directors

President	Debra Scott
Vice President	Michael Thomas
Director	Harry Farmer
Director	Tom Gray
Director	Karen Dean

Officers

General Manager	Matthew McElhenie
District Counsel	Timothy J. Carmel

CCSD District Staff

Toni Artho, Wastewater Systems Superintendent	Matthew McElhenie, General Manager
Legally Responsible Official	Legally Responsible Official
Tel: (805) 927-6233	Tel: (805) 927-6230 (805) 503-0466
Fax:	Fax:
Email: tartho@cambriacsd.org	Email: mmcelhenie@cambriacsd.org
Tristan Reaper, Program Manager	Jim Green, Utilities Department Manager
Data Submitter	Tel: (805) 927-6233
Tel: (805) 489-6666	Fax:
Fax:	Email: jgreen@cambriacsd.org
Email: treaper@cambriacsd.org	
	Delon Blackburn, Wastewater Operator II
Benjamin Bivens, Wastewater Operator II	Tel: (805) 927-6233
Tel: (805) 927-6233	Fax:
Fax:	Email: dblackburn@cambriacsd.org
Email: bbivens@cambriacsd.org	
Ryan Staley, Wastewater Treatment Plant Operator-In-Training	Arthur Garney, Wastewater Operator II
Tel: (805) 927-6233	Tel: (805) 927-6233
Fax:	Fax:
Email: rstaley@cambriacsd.org	Email: agarney@cambriacsd.org

Christien McManus, Wastewater Collection System Maintenance Worker	Aaron Moe, Wastewater Collection System Maintenance Worker
Data Submitter	Tel: (805) 927-6233
Tel: (805) 927-6233	Fax:
Fax:	Email: amoe@cambriacsd.org
Email: cmcmanus@cambriacsd.org	Aaron Moe, Wastewater Collection System Maintenance Worker

24-Hour Emergency Number

Cambria Community Services District

2150 Main Street, #1-A

Cambria, CA 93428

(805) 927-6223

Chain of Communicating Sanitary Sewer Overflows

Organization	Contact Person	Phone Number
Cal OES Warning Center		(800) 852-7550
Central Coast Regional Water Quality Control Board	Dispatch	(805)549-3891
CCRWQB for Discharge to Waters of the United States	Arwen Wyattmair	(805)542-4695
County of San Luis Obispo Public Health Department		(805)542-4695
California OES SLO County Emergency Services Coordinator	Elise Arata	(916)628-0371
California Department of Fish and Wildlife (Central Region)		(559)243-4005

SSMP Execution

Name and Title	SSMP Responsibilities	Contact Numbers
Matthew McElhenie, General Manager	Coordinates with District Board on resource needs and policy direction, plans strategy, leads staff, allocates resources, delegates responsibility, authorizes outside contractors to perform services, and serves as public information officer.	(805) 927-6230 (805) 503-0466
Toni Artho, Wastewater Department Manager	Manages field operations and maintenance activities, develops self- monitoring reports and leads communications with regulatory agencies, prepares and implements contingency plans, leads emergency response, investigates and reports SSOs, and trains field crews.	(805) 927-6233
XXX, District Engineer	Prepares wastewater collection system planning documents; manages capital improvement delivery system; documents new and rehabilitated assets; and coordinates development and implementation of SSMP.	XXX
XXX, Permit Compliance Specialist	Supports CCSD staff in meeting regulatory and permitting requirements. Assists with updating the SSMP and tracking updating and its biennial audit. Coordinates with regulatory agency staff on key submittals and deadlines.	XXX

Emergency Contractors

Company	Service	Contact
Dehance Construction	Emergency Contractor – sewer and force main repairs	805-489-7310
D-Kal Engineering	Emergency Contractor – sewer and force main repairs	805-543-7758
FRM	Emergency Contractor – Lift Station Repairs, contracted vacuum removal (Vactor) of sewer obstructions	805-441-5318
Alpha Electrical Service	Emergency Contractor -- power supply and electrical controls	(805) 595-2720
Tough Automation	Lift Station Controls, SCADA, and programmable logic controller (PLC) updating and troubleshooting	805-400-9015
Al's Septic Pumping Service	Emergency Contractor -- Sewer line pumping/SSO cleanup responses	805-528-0432
North Coast Tree Services	Placement & filling of sandbags, tree & brush removal	805-927-8525
Professional Pipe Services (aka Pro Pipe)	Sewer Cleaning, Trenchless Repair, and CCTV Inspection Contractor	909-598-9743

Traffic Control

Company	Service	Contact
Associated Traffic Safety	Flagging & signage	805-461-1600
Traffic Management Inc.	Traffic control plans, permitting	805-585-4986

Erosion Control & Site Restoration Supplies

Company	Service	Contact
Pacific Soil Stabilization	Specialty erosion control supplies, including biodegradable swaddles, dechlorination tablets, etc.	(805) 925-7737
S & S Seed	Native grass mixes for hydro-seeding & related restoration applications	(805) 684-0436
Dorman Hydroseeding	Hydroseeding	(805) 466-2555

Environmental Monitoring

Company	Service	Contact
Cindy Cleveland Biological Services	Biological monitoring services	805-234-3759
Kevin Merk Associates	Biological monitoring services	805-748-5837

Regulatory Agencies (Potential impacts on surface water, groundwater, fish or wild animals)

Agency	Representative	Contact
Cal OES Warning Center	**Required of sewage spills of 1,000 gallons or more.** **Notification required within 2 hours for any Class I SSO that is uncontained and enters a waterway, storm drain or ocean. (See Section 6 and Appendix VIII further information.)**	First Call 9-1-1 Then call Cal OES at 800-852-7550, or 916-845-8911
Central Coast Regional Water Quality Control Board	XXX - regulatory representative for compliance and notifications	Office: Cell:
Division of Drinking Water (District 6)	Jeff Densmore	805-566-1326
Monterey Bay National Marine Sanctuary	**SSOs that could impact the Ocean** Scott Kathey	Office: 831-647-4203 Fax: 831-647-4251 Direct: 831-647-4250
California Department of Fish and Wildlife - Central Region (Region 4)	Julie Vance Jim Solis	559-243-4005 831-649-2817
U.S. Fish & Wildlife Service	Denise Steurer	805-644-176
National Marine Fisheries	Anthony Spina	562-980-4045
California Coastal Commission	XXX	XXX
California State Parks Hilltop Dispatch	**Any Beach affected areas**	805-927-2068
County Environmental Health Sheriff's Administration	**Spill line** **If after hours or on land**	805-781-5544 Fax: 805-781-4211 805-781-4550

News Agencies

Outlet	Department	Contact
Cambrian Newspaper	Kathe Tanner (North Coast Reporter)	805-927-4708
KTEA (Local Cambria Radio Station)	Office	805-924-0103
KSBY (Local SLO County TV Station)	Newsroom	805-597-8400

Appendix C

Municipal Code Title V

Title 5
WASTEWATER SYSTEMS

Chapters:

Chapter 5.04 WASTEWATER SYSTEMS

Sections:

Article I. Definitions

5.04.010 Definitions.

All of the definitions in this chapter shall be used in construing all ordinances of this district, provisions of this code, and amendments thereto, pertaining to sewers and sewage, regardless of the time of enactment unless the same shall specify a different meaning for such word or words.

"Applicant" means the person making application for a permit for a sewer installation and shall be the owner of the premises to be served by the sewer for which a permit is requested, or authorized agent.

"Assessment district" means Cambria sewer assessment districts No. 1 and No. 2 created under the provisions of the Streets and Highway Code of the state of California. Additional assessment districts, if created, shall be identified by number such as sewer assessment district No. 3.

"Board" means the board of directors of the Cambria Community Services District.

"BOD" (denoting Biochemical Oxygen Demand) means the quantity of oxygen utilized in the biochemical oxidation of organic matter under standard laboratory procedure in five days at twenty (20) degrees centigrade, expressed in milligrams per liter.

"Building" means any structure used for human habitation or a place of business, recreation or other purpose containing sanitary facilities.

"Building drain" means that part of the lowest horizontal piping of a drainage system which receives the discharge from soil, waste, and other drainage pipes inside the walls of the building and conveys it to the building sewer, beginning two feet outside the building wall.

"Building sewer" means that portion of any sewer beginning two feet outside the building wall of any building or industrial facility and running to the property line.

"Code" means the most current edition of the Uniform Plumbing Code published by the International Association of Plumbing and Mechanical Officials.

"Commercial project," for the purpose of water allocation and connection fees, means all projects (including recreational) other than residential.

"Contractor" means a person duly licensed by the state of California to perform the type of sewer work to be done under the permit and approved by the district.

"District" means the Cambria Community Services District.

"Engineer" means the district engineer appointed by and acting for the district.

"Equivalent connection" means a source of wastewater equal in daily volume and quality to that produced in a single-family dwelling, considered to be two hundred forty (240) gallons per twenty-four (24)-hour day.

"Equivalent dwelling unit ("EDU")" means a base unit of measure of water use, with one EDU being equal to the average monthly amount of water used by a residential unit during the summer season. EDUs are established to set a benchmark in regulating the addition of new water and sewer users to the district's water and sewerage facilities as well as determining connection fees.

"Garbage" means solid wastes from the domestic and commercial preparation, cooking, and dispensing of food, and from the handling, storage, and sale of produce.

"Industrial wastes" means the liquid wastes from industrial manufacturing processes, trade, or business as distinct from sanitary sewage.

"Inspector" means a person acting for the district in the capacity of an inspector and may be the general manager, or authorized representative.

"Lateral sewer" means the portion of a sewer lying within a public way or easement connecting a building sewer to the main sewer.

"Main sewer" means a public sewer designed to accommodate more than one lateral sewer.

"Manager" means the general manager of the Cambria Community Services District.

"Permit" means any written authorization required pursuant to this or any other regulation of the district for the installation of any sewage works.

"Person" means any human being, individual, firm, company, partnership, association and private or public and municipal corporation, the United States of America, the state of California, districts and all political subdivisions, governmental agencies and mandatories thereof.

"pH" means the logarithm of the reciprocal of the weight of hydrogen ions in grams per liter of solution.

"Project" means new construction, additions to existing facilities, changes or intensification of use or occupancies in an existing facility, or demolition and replacement of existing facilities.

"Properly shredded garbage" means the wastes from the preparation, cooking, and dispensing of food that have been shredded to such a degree that all particles will be carried freely under the flow conditions normally prevailing in public sewers, with no particle greater than one-half inch (1.27 centimeters) in any dimension.

"Public sewer" means a sewer lying within a public way or an easement in which all owners of abutting properties have equal rights, and is controlled by the district.

"Sanitary sewer" means a sewer which carries wastewater and to which storm, surface, and ground waters are not intentionally admitted.

"Summer season" means the six month period from May 1st through October 31st.

"Table of equivalent dwelling units" means the table attached to the ordinance codified in this chapter and adopted herein by reference. The table of equivalent dwelling units determines the number of EDUs attributable to various types of projects for water allocation and sewer and water connection fee purposes. When a project does not conveniently fit into any of the categories delineated in the table, the general manager shall compute the required EDUs by developing a project average monthly summer season water demand estimate and then converting to EDUs.

"Wastewater system" means all facilities for collecting, pumping, treating, and disposing of wastewater.

"Sewer" means a pipe or conduit for carrying wastewater.

"Shall" is mandatory; "may" is permissive.

"Superintendent" means the water quality superintendent who under the general supervision of the manager, operates and maintains the wastewater system.

"Wastewater" means a combination of the water-carried wastes from residences, business buildings, institutions, and industrial establishments.

"Water quality control plant" means the plant which treats and disposes of wastewater.

(Amended during 2004 codification; Ord. W-82 Art. I (part); Ord. S-82 Art. I)

Article II. General Provisions

5.04.020 Not retroactive.

This chapter is intended to provide rules and regulations for the use and construction of sanitary facilities hereinafter installed. Unless otherwise specified, no provision of this chapter shall apply retroactively. If, however, alterations or repairs are made, this chapter shall apply to materials and methods used in such alterations. Notwithstanding the above the board may require correction of existing sanitary facilities which violate provisions of this chapter.

(Ord. S-82 § 2-2)

5.04.030 Existing rules repealed.

Upon the effective date of the ordinance codified in this chapter all existing rules, orders, motions and policies of the Cambria Community Services District, concerning wastewater and/or sanitary construction work are rescinded and this chapter shall govern.

(Ord. S-82 § 2-3)

5.04.040 Violation unlawful.

Following the effective date of the ordinance codified in this chapter it shall be unlawful for any person to connect to, construct, install or provide, maintain and/or use any other means of wastewater disposal from any building in the district except by connection to a public sewer in the manner as in this chapter provided, when such public sewer has been constructed and accepted for use and is within two hundred (200) feet of the property containing the building.

(Ord. S-82 § 2-4)

5.04.050 Relief on application.

When any person by reason of special circumstances thinks that any provision of this chapter is unjust or inequitable as applied to his or her premises, he or she may make written application to the board, stating the special circumstances, citing the provision complained of, and requesting suspension as applied to his or her premises. If the board makes findings, the board may, by motion, suspend or modify the provision complained of, as applied to such premises, to be effective as of the date of the application and continuing during the period of the special circumstances.

(Ord. S-82 § 2-5)

5.04.060 Relief on own motion.

The district may, on its own motion, find that by reason of special circumstances any provision of this regulation and ordinance should be suspended or modified as applied to a particular premise during the period of such circumstances, or any part thereof.

(Ord. S-82 § 2-6)

5.04.070 Connection required.

The owner of all houses, buildings, or properties used for human occupancy, employment, recreation, or other purposes, situated within the district and abutting on any street, alley, or right-of-way in which there is now located or may in the future be located a public sewer of the district, is required at his or her expense to connect such facilities directly with the proper public sewer in accordance with the provisions of this chapter, within ninety (90) days after date of official notice to do so, provided that the public sewer is within two hundred (200) feet of the property line.

(Ord. S-82 § 2-7)

5.04.080 Permits required and fees paid before commencement of work.

No public sewer, lateral sewer, building rain, or other sanitary facilities shall be installed, altered or repaired within the district until a permit for the work has been obtained from the district and all fees paid in accordance with the requirements of this chapter.

(Ord. S-82 § 2-8)

5.04.090 Powers and authorities of inspectors.

The manager and any duly authorized employees of the district shall be permitted, upon showing evidence of his or her position, to enter private property for the purpose of inspection, reinspection, observation, measurement, sampling, testing or otherwise performing such duties as may be necessary in the enforcement of the provisions of the ordinances, rules and regulations of the district.

(Ord. S-82 § 2-9)

5.04.100 Protection from damage.

No person shall maliciously, willfully, or negligently break, damage, destroy, uncover, deface or tamper with any structure, appurtenance or equipment which is a part of the district wastewater facilities. Any person violating this provision shall be subject to the penalties provided by law.

(Ord. S-82 § 2-10)

5.04.110 Separability.

If any section, subsection, sentence, clause or phrase of this chapter or the application thereof to any person or circumstances is for any reason held to be unconstitutional or invalid, such decision shall not affect the validity of the remaining portions of this chapter of the application of such provision to other persons or circumstances. The board declares that it would have passed the ordinance codified in this chapter or any section, subsection, sentence, clause or phrase hereof irrespective of the fact that any one or more sections, subsections, sentences, clauses or phrases be declared to be unconstitutional.

(Ord. S-82 § 2-11)

Article III. Use of Public Sewers Required

5.04.120 Disposal of wastes.

It is unlawful for any person to place, deposit, or permit to be deposited upon public or private property within the district, or in any area under the jurisdiction of the district, any human excrement or other objectionable waste.

(Ord. S-82 § 3-1)

5.04.130 Treatment of wastes required.

It is unlawful to discharge to any stream or water course, any wastewater, industrial wastes or other polluted waters, except where suitable treatment has been provided in accordance with provisions of this chapter.

(Ord. S-82 § 3-2)

5.04.140 When connection to public sewer required.

The owner of any real property with any building, structure or other improvement thereon which is suitable for use or occupancy by human beings is required to connect the same directly with the proper public sewer in accordance with the provisions of this chapter within ninety (90) days after receipt of written notice to do so if there is a sewer main within two hundred (200) feet of the nearest point of any such building, structure or other improvement. If such sewer main is not available within the two hundred (200) foot distance at the time of the enactment of the ordinance codified in this chapter, the duty to connect will nonetheless arise at such future time as there is a sewer main within two hundred (200) feet of the nearest point of such building, structure or other improvement and notice is given as provided in this section. In the case of a newly constructed building, structure or other improvement thereon, the same shall be deemed a building suitable for occupancy and/or use within the meaning of this section at such time as such building, structure or other improvement is offered for sale or within thirty (30) days after its construction is completed, whichever is sooner.

(Ord. S-82 § 3-3)

5.04.150 Drainage into sanitary sewers prohibited.

No leaders from roofs and no surface drains for rain water shall be connected to any sanitary sewer. No surface or subsurface drainage, rain water, storm water, seepage, cooling water of industrial origin or unpolluted industrial process waters shall be permitted to enter any sanitary sewer by any device or method whatsoever.

(Ord. S-82 § 3-4)

5.04.160 Types of wastes prohibited.

No person shall discharge or cause to be discharged any of the following described waters or wastes to any public sewers:

A. Any gasoline, benzene, naphtha, fuel oil, or other flammable or explosive liquid, solid, or gas;

B. Any waters or wastes containing toxic or poisonous solids, liquids, or gases in sufficient quantity, either singly or by interaction with other wastes, to injure or interfere with any wastewater treatment process, constitute a hazard to humans or animals, create a public nuisance, or create any hazard in the receiving waters of the wastewater treatment plant, including but not limited to cyanides in excess of two mg/l as CN in the wastes as discharges to the public sewer;

C. Any waters or wastes having a pH lower than (5.5), or having any other corrosive property capable of causing damage or hazard to structures, equipment, and personnel of the wastewater works;

D. Solid or viscous substances in quantities or of such size capable of causing obstruction to the flow in sewers, or other interference with the proper operation of the wastewater works such as, but not limited to, ashes, cinders, sand, mud, straw, shavings, metal, glass, rags, feathers, tar, plastics, wood, unground garbage, whole blood, paunch manure, hair and fleshings, entrails and paper dishes, cups, milk containers, etc. either whole or ground by garbage grinders.

(Ord. S-82 § 3-5)

5.04.170 Other wastes prohibited.

No person shall discharge or cause to be discharged the following described substances, materials, waters, or wastes if it appears likely in the opinion of the manager that such wastes can harm either the sewers wastewater treatment process, or equipment, have an adverse effect on the receiving stream, or can otherwise endanger life, limb, public property, or constitute a nuisance. In forming his or her opinion as to the acceptability of these wastes, the manager will give consideration to such factors as the quantities of subject wastes in relation to flows and velocities in the sewers, materials of construction of the sewers, nature of the wastewaters treatment process, capacity of the wastewater treatment plant, degree of treatability of wastes in the wastewater treatment plant, and other pertinent factors. The substances prohibited are:

A. Any liquid or vapor having a temperature higher than one hundred forty (140) degrees Fahrenheit;

B. Any water or waste containing fats, wax, grease, or oils, whether emulsified or not, in excess of one hundred (100) mg/l or containing substances which may solidify or become viscous at temperatures between thirty-two (32) degrees Fahrenheit and one hundred fifty (150) degrees Fahrenheit;

C. Any garbage that has not been properly shredded so that no particles are greater than one-half inch in any dimension. The installation and operation of any garbage grinder equipped with a motor of three-fourths horsepower or greater shall be subject to the review and approval of the manager;

D. Any waters or wastes containing strong acid iron pickling wastes, or concentrated plating solutions whether neutralized or not;

E. Any waters or wastes containing iron, chromium, copper, zinc, and similar objectionable or toxic substances; or wastes exerting an excessive chlorine requirement, to such degree that any such material received in the composite sewage at the wastewater treatment works exceeds the limits established by the manager for such materials;

F. Any waters or wastes containing phenols or other taste-or-odor-producing substances, in such concentrations exceeding limits which may be established by the manager as necessary, after treatment of the composite wastewater, to meet the requirements of the state, federal, or other public agencies or jurisdiction for such discharge to the receiving waters;

G. Any radioactive wastes or isotopes of such half-life or concentration as may exceed limits established by the manager in compliance with applicable state or federal regulations;

H. Any waters or wastes having a pH in excess of (9.5);

I. Materials which exert or cause:

1. Unusual concentration of inert suspended solids (such as, but not limited to, Fullers earth, lime slurries, and lime residues) or of dissolved solids (such as, but not limited to, sodium chloride and sodium sulfate),

2. Excessive discoloration (such as, but not limited to, dye wastes and vegetable tanning solutions),

3. Unusual BOD, chemical oxygen demand, or chlorine requirements in such quantities as to constitute a significant load on the wastewater treatment works,

4. Unusual volume of flow or concentration of wastes constituting "slugs" as defined herein;

J. Waters or wastes containing substances which are not amenable to treatment or reduction by the wastewater treatment processes employed, or are amenable to treatment only to such degree that the wastewater plant effluent cannot meet the requirements of other agencies having jurisdiction over discharge to the receiving waters.

(Ord. S-82 § 3-6)

5.04.180 Manager's discretion regarding waste discharges.

If any waters or wastes are discharged, or are proposed to be discharged to the public sewers, which waters contain the substances or possess the characteristics enumerated in this article, and which in the judgment of the manager, may have a deleterious effect upon the wastewater works, processes, equipment, or receiving waters, or which otherwise create a hazard to life or constitute a public nuisance, and/or may cause the district to violate discharge requirements, the manager may:

A. Reject the wastes;

B. Require pretreatment as to an acceptable condition for discharge to the public sewers;

C. Require control over the quantities and rates of discharge; and/or

D. Require payment to cover the added cost of handling and treating the wastes not covered by existing taxes or sewer charges under the provisions of this article.

If the manager permits the pretreatment or equalization of waste flows, the design and installation of the plants and equipment shall be subject to the review and approval of the manager, and subject to the requirements of all applicable codes, ordinances, and laws.

(Ord. S-82 § 3-7)

5.04.190 Interceptors required.

Grease, oil, and sand interceptors shall be provided when, in the opinion of the manager, they are necessary for the proper handling of liquid wastes containing grease in excessive amounts, or any flammable wastes, sand, or

other harmful ingredients; except that such interceptors shall be of a type and capacity approved by the manager, and shall be located as to be readily and easily accessible for cleaning and inspection.

(Ord. S-82 § 3-8)

5.04.200 Maintenance of interceptors.

Where preliminary treatment or flow-equalizing facilities are provided for any waters or wastes, they shall be maintained continuously in satisfactory and effective operation by the owner at his or her expense.

(Ord. S-82 § 3-9)

5.04.210 Control manhole.

When required by the manager, the owner of any property serviced by a building sewer carrying industrial wastes shall install a suitable control manhole together with such necessary meters and other appurtenances in the building sewer to facilitate observation, sampling, and safely located, and shall be installed by the owner at his or her expense, and shall be maintained by him or her so as to be safe and accessible at all times.

(Ord. S-82 § 3-10)

5.04.220 Measurement and tests of waste discharge.

All measurements, tests, and analyses of the characteristics of waters and wastes to which reference is made in this chapter shall be determined in accordance with the latest edition of Standard Methods for the Examination of Water and Wastewater, published by the American Public Health Association, and shall be determined at the control manhole provided, or upon suitable samples taken at the control manhole. In the event that no special manhole has been required, the control manhole shall be considered to be the nearest downstream manhole in the public sewer to the point at which the building sewer is connected. Sampling shall be carried out by customarily accepted methods to reflect the effect of constituents upon the wastewater works and to determine the existence of hazards to life, limb, and property. (The particular analyses involved will determine whether a grab sample or samples should be taken. Normally, but not always, BOD and suspended solids analyses are obtained from twenty-four (24) hour composites of all outfalls whereas pH's are determined from periodic grab samples.)

(Ord. S-82 § 3-11)

5.04.230 Preliminary treatment of wastes.

Liquids and wastes prohibited by this chapter may with proper preliminary treatment be permitted in the district facilities. Permission to discharge will only be considered after plans, specifications and other information has been furnished to the board to indicate that the proposed preliminary treatment reduces, removes or changes the objectionable characteristics or constituents to satisfactory levels. All costs of construction, operation, maintenance, inspection, sampling and testing shall be at the expense of the owner. No construction or connection to the district facilities shall be started until a permit required by the board, and a cash bond to guarantee adequate maintenance and operation of the preliminary treatment facilities is secured.

(Amended during 2004 codification; Ord. S-82 § 3-12)

5.04.240 Special agreements.

No statement contained in this article shall be construed as preventing any special agreement or arrangement between the district and any industrial concern whereby an industrial waste of unusual strength or character may be accepted by the district for treatment, subject to payment therefore, by the industrial concern.

(Ord. S-82 § 3-13)

5.04.250 Swimming pool waste.

No swimming pool waste may be discharged into the district wastewater facilities.

(Ord. S-82 § 3-14)

Article IV. Building Sewers, Lateral Sewers and Connections

5.04.260 Permit required for connection to public sewer.

No person shall construct a building sewer, lateral sewer or make a connection with any public sewer without first obtaining a written permit from the district and paying all fees and charges as required and doing the work in accordance with the provisions of this chapter.

(Ord. S-82 § 4-1)

5.04.270 Construction requirements.

Construction of building and lateral service shall be accomplished according to the California Approved Uniform Plumbing Code as adopted by the board of directors.

(Ord. S-82 § 4-2)

5.04.280 Separate sewers required for separate lots.

Building sewers and lateral sewers shall only serve one lot or parcel under a single ownership. Every building or industrial facility must be separately connected with a public sewer if such public sewer exists in the street upon which the property abuts or in an easement which will serve the property. However, one or more buildings, located on property belonging to the same owner may be served with the same sewer during the period of the ownership. Upon the subsequent subdivision and sale of a portion of the lot, the portion not directly connected with such public sewer shall be separately so connected with a public sewer, and it is unlawful for the owner thereof to continue to use or maintain such indirect connection.

(Ord. S-82 § 4-3)

5.04.290 Use of existing building sewers permitted only upon approval.

Old building sewers may be used in connection with new buildings only when they are found, upon examination and test by the inspector, to meet all requirements of district.

(Ord. S-82 § 4-4)

5.04.300 Relations of building drain to sewer lateral.

A. Where the building drain is sufficiently higher than the end of the lateral sewer to permit the building sewer to slope in accordance with the provisions of this chapter and where the lowest floor of the building which contains sanitary facilities is at an elevation above the rim of the closest upstream manhole, no special conditions are imposed.

B. Where the lowest floor of the building which contains sanitary facilities is at an elevation below the rim of the closest upstream manhole, but gravity flow from the building drain to the end of the lateral sewer is possible, the owner shall either at his or her cost install a relief valve in the building sewer, at an elevation lower than the above floor elevation or shall agree that the district shall not be responsible for damage caused by an overflow of waste liquid inside the building.

C. Where gravity discharge of wastewater is not possible, the owner shall install equipment to pump the wastewater to the lateral sewer. The discharge pipe shall not be less than two inches inside diameter and shall contain a suitable method of preventing backflow from the lateral sewer.

(Ord. S-82 § 4-5)

5.04.310 Manner of connection of building sewer to lateral sewer.

The connection of the building sewer into the public sewer shall be made at the lateral sewer if the lateral is available. In easements, connection shall be made at an existing wye. The connection shall be made in the presence of an inspector and under his or her supervision.

(Ord. S-82 § 4-6)

5.04.320 Tests.

Building sewers shall be tested by plugging the end of the building sewer at its connection with the lateral sewer and completely filling the building sewer with water so that, with a head of ten (10) feet of water, no loss of water occurs during a fifteen (15) minute period of time.

(Ord. S-82 § 4-7)

5.04.330 Abandonment of private wastewater facilities required when public sewer available.

At such time as a public sewer becomes available to a property served by a private wastewater disposal system, as elsewhere provided in this chapter, a direct connection shall be made to the public sewer in compliance with the rules and regulations of district and any septic tanks, cesspools and similar private wastewater disposal facilities shall be abandoned and they shall be filled with sand or approved suitable material, in accordance with the provisions of the code and any requirements of the State and County Health Departments. No work of abandonment shall be done without a permit issued by the district and without the required inspection.

(Ord. S-82 § 4-8)

5.04.340 Requirements to provide contractor information.

Prior to commencing any installing of building and/or lateral sewers, the contractor must provide the information requested in WWD Form No. 1 Contracting and Permit Requirements for Installing Building and Lateral Sewers within the Cambria Community Services District incorporated herein by reference.

(Ord. S-82 § 4-9)

5.04.350 Who may install building sewers.

Building sewers, together with the related work of connecting the building sewer with the building drain and with the lateral sewer and abandoning septic tanks, cesspools or dry wells shall be done by plumbing contractors and/or sewer contractors duly licensed by the state of California and such other state licensed contractors whose license includes the right to install sewers. The above contractors shall be approved by the manager and may be required to post a bond to guarantee that damage to the district facilities will be repaired. In addition to the above, a property owner shall be granted a permit to install a building sewer on property owned by him or her provided the manager is satisfied that he or she can install and test the building sewer in accordance with the requirements of this chapter.

(Ord. S-82 § 4-10)

5.04.360 Who may install lateral sewers.

Lateral sewers may be installed by contractors licensed by the Contractors State License Board in the following classifications: General Engineering (Class A); Plumbing (C-36); Pipeline (C-34); or Sanitary Systems (C-42). Only licensed contractors approved by the district shall be allowed to install lateral sewers within the district. Contractors shall be approved by the general manager or authorized representative, post a minimum of three thousand dollars ($3,000.00) bond to warranty their work, show proof of liability insurance in the minimum amount of three hundred thousand dollars ($300,000.00) per occurrence; maintain workman's compensation insurance in accordance with the Labor Code of the state of California, and obtain an encroachment permit from the San Luis Obispo County Engineering Department or CalTrans if the sewer lateral is in a public street or right-of-way. The contractor's work shall be warranted for a period of three years. The district's general manager, may require a higher bond amount based upon the specific installation of a lateral sewer or past performance of a specific contractor that shall not exceed ten thousand dollars ($10,000.00).

(Ord. 2-96 § 2)

5.04.370 Installation of wyes.

When it is necessary to install a wye on a main sewer, the hole in the main sewer pipe shall be cut by an approved sewer tapping machine. The use of chisels to cut the hole will not be permitted. The wye branch shall be a standard vitrified clay pipe manufactured for the purpose and shall be joined to the sewer pipe with an epoxy to form a smooth neat watertight joint with no protrusion into the barrel of the main sewer pipe. All work of cutting and installing shall be done in the presence of an inspector.

(Ord. S-82 § 4-12)

5.04.380 Protection of excavation.

All excavations for a lateral sewer or building sewer shall be adequately guarded with barricades and lights so as to protect the public from hazards. Streets, sidewalks, parkways and other property disturbed in the course of the work shall be restored in a manner satisfactory to the district.

(Ord. S-82 § 4-13)

5.04.390 Maintenance of building sewers and lateral sewers.

A. Building sewers, lateral sewers and all connections from the building wall up to and including the connection to the main sewer are the responsibility of the property owner(s) of the connected building. All property owner(s) whose properties are connected to a main sewer or are otherwise connected to the District's sewer system shall, at their own expense, maintain the lateral sewer and ensure that the lateral, or any portion thereof, is free of displaced, offset or open joints, cracks, leaks, inflow or infiltration, root intrusion or other conditions likely to increase the chance for lateral blockage or failure. All property owners shall ensure that laterals drain freely to the main sewer without excessive sags or offsets that collect grease or sediment.

B. No person shall break or cut into or connect to any sewer in any street, easement or right-of-way in the District or under the control of the District, and no maintenance or repair of building sewers which involve uncovering or removing the sewer pipe, shall be started without first securing a permit to do so from the District, except in an emergency in which case a permit shall be obtained at the first reasonable opportunity and no work covered until an inspection by the District has been made. With the exception of any such emergencies, prior to beginning work, plans describing the work to be performed shall be submitted to and approved by the General Manager.

C. The District assumes no responsibility for the accuracy of the any sewer maps on file with the District, or to the existence or non-existence of sewer laterals from the main line to the property line shown therein. Furthermore, the District assumes no responsibility in the event a lateral cannot be located, or if located, the lateral is not in a suitable location or situated as mapped.

D. Property owners shall inspect, and provide to the District, a report of the results of an inspection of the lateral sewer on their property using closed circuit television (CCTV) inspection or other inspection or test method approved by the General Manager, under the following conditions:

1. When building a new structure on property with an existing lateral, or when otherwise proposing to connect a previously unconnected structure to an existing lateral; and

2. As a condition of approval for continuing service by the District of any building remodel project unless the property owner presents satisfactory proof to the District that the sewer lateral line is less than ten (10) years old or has been replaced within the last ten (10) years; and

3. Upon a sewage overflow emanating from a lateral onto public property, including but not limited to a street or storm drain system, or has flowed onto private property owned by another property owner; and

4. Whenever the District finds that a sewage overflow emanating from a lateral presents a threat to public health or creates a public nuisance, even if it has not flowed across a property line; and

5. Defective laterals that have any of the following conditions: displaced or offset joints, root intrusion, substantial deterioration of the lines, damaged cleanout, defective cleanout, inflow, infiltration or any other condition likely to increase the chance for a lateral blockage or failure. As part of its periodic construction, maintenance and replacement of main sewers, the District may discover defective laterals. The District may order the property owner to conduct an inspection, repair or replacement of any lateral that the District finds to be defective. Existing laterals shall not be used if they are found to be defective or if they fail District mandated inspections or tests, or if they were constructed of materials deemed unacceptable by the General Manager. Whenever a defective lateral is discovered, the property owner, at his/her sole expense, shall repair or replace the lateral. In the absence of a specific deadline, all inspection and testing work shall be completed within 60 days of notification by the District that such inspection is required unless alternative arrangements have been agreed to by the District in writing.

E. The General Manager shall determine the extent of repair required, and such repair, short of complete replacement of the lateral, may be authorized at the sole discretion of the General Manager. The following requirements for lateral repair or replacements shall be met:

1. A repaired or replaced lateral shall be brought into compliance with the requirements and regulations of the District. Cleanout devices must be installed on all repaired or replaced laterals, and backflow valves shall be required to be installed on laterals meeting the criteria of the District; and

2. A replaced or repaired lateral shall not be covered or backfilled until it has been inspected by a District representative; and

3. Roots, grease, or other material must be prevented from entering the sanitary sewer system during cleaning or repair of sewer laterals. In the event that material is permitted to enter the main causing or contributing to the cause of a sewage spill, the property owner and/or contractor performing such maintenance work, in addition to any criminal penalties imposed, shall be held civilly liable to the District for any fines or other costs or expenses incurred by the District resulting from the spill.

F. It is unlawful for any person or entity to act in a manner inconsistent with the provisions set forth herein. Any person or entity found to be in violation of this Ordinance shall be guilty of a misdemeanor pursuant to Section 1.12.010, and every day such person or entity is in violation shall constitute a new and separate offense pursuant to Section 1.12.020 of this Code. The District shall have the authority to recover from a property owner the District's actual expenses incurred in responding to lateral caused overflows on private property, or any other expenses incurred by the District in enforcing the provisions set forth herein.

(Ord. S-82 § 4-14)

(Ord. No. 01-2012, § 1, 2-23-2012)

Editor's note(s)—Ord. No. 01-2012, § 1, adopted Feb. 23, 2012, amended § 5.04.390 title to read as herein set out. Former § 5.04.390 title pertained to maintenance of building sewers.

Article V. Public Sewer Construction

5.04.400 Fees and permit required before connecting to public sewers.

No person shall construct, extend or connect to any public sewer without first obtaining a written permit from the district and paying all fees and connection charges and furnishing bonds as required. The provisions of this section requiring permits shall not be construed to apply to contractors constructing sewers and appurtenances under contracts awarded and entered into by the district.

(Ord. S-82 § 5-1)

5.04.410 Plans, profiles and specifications required to accompany permit application.

The application for permit for public sewer construction shall be accompanied by complete plans, profiles and specifications, complying with all applicable ordinances, rules and regulations of district, prepared by a registered civil engineer showing all details of the proposed work based on an accurate survey of the ground. Plans shall include lateral sewers to all lots in a proposed subdivision. The application, together with the plans, profiles and specifications shall be examined by the district engineer who shall, within ten (10) days, approve them as filed or require them to be modified as he or she deems necessary for proper installation. After examination by the district engineer, the application, plans, profiles and specifications shall be submitted to the board at its next regular meeting for its consideration. When the board is satisfied that the proposed work is proper and the plans,

profiles and specifications are sufficient and correct, it shall order the issuance of a permit predicated upon the payment of all connection charges, fees and furnishing bonds as required by the district. The permit shall prescribe such terms and conditions as the district finds necessary in the public interest.

(Ord. S-82 § 5-2)

5.04.420 Subdivisions.

Prior to the granting of approval by the district to the recording of a final map or of installing any part of the sewer system, the applicant shall have complied with the preceding three sections and shall have entered into an agreement with the board to comply with all applicable provisions of this chapter and to either pay all fees or to post bonds guaranteeing the payment of all fees prior to an agreed date or an agreed event, such as acceptance of the sewers by the district, or clear statements which agree with statements in the State Real Estate Report that all unpaid fees will be paid by the property owner prior to occupancy of the house or other structure.

All sewers and sewage facilities shall be in streets or rights-of-way dedicated for public use or shall be in easements granted to the Cambria Community Services District. If a final subdivision map of a tract is recorded and the work of constructing sewers to serve the tract is not completed within the time limit allowed in the permit, the board may extend the time limit or may complete the work and take appropriate steps to enforce the provisions of the bond furnished by the subdivider.

(Ord. S-82 § 5-3)

5.04.430 Easements or rights-of-way for extensions or connections.

In the event that an easement is required for the extension of the public sewer or the making of connections, the applicant shall procure and have accepted by the district a proper easement or grant right-of-way sufficient in size to allow the laying and maintenance of such extension or connection. The cost of obtaining the easement or right-of-way shall be paid by the applicant. Should the applicant be unable to obtain the easement or right-of-way by negotiation with the owner or owners, and providing the board determines that it is to the interest of the district to have the easement or right-of-way, the board will cause the easement or right-of-way to be condemned and the applicant shall pay all costs incurred by the district.

(Ord. S-82 § 5-4)

5.04.440 Persons authorized to perform work.

Only properly licensed contractors shall be authorized to perform the work of public sewer construction within the district. All terms and conditions of the permit issued by the district to applicant shall be binding on the contractor. The requirements of this section shall apply to lateral sewers installed concurrently with public sewer construction.

(Ord. S-82 § 5-5)

5.04.450 Grade stakes to be set by licensed civil engineer or surveyor.

Grade and line stakes shall be set by a registered civil engineer, or by a licensed surveyor, prior to the start of work on any public sewer construction. The contractor shall be responsible for accurately transferring grades to grade bars and sewer invert.

(Ord. S-82 § 5-6)

5.04.460 Compliance with state, county and district rules, regulations and ordinances required.

Any person constructing a sewer within a public way or easement, shall comply with all state, county, or district laws, ordinances, rules and regulations pertaining to the cutting of pavement, opening, barricading, lighting and protecting of trenches, back-filling and repaving thereof, and shall obtain all permits and pay all fees required by the department having jurisdiction prior to the issuance of a permit by the district.

(Ord. S-82 § 5-7)

5.04.470 Protection of excavation and restoration after completion.

The applicant shall maintain such barriers, lights and signs as are necessary to give warning to the public at all times that a sewer is under construction and of each dangerous condition to be encountered as a result thereof. He or she shall also likewise protect the public in the use of the sidewalk against any such conditions in connection with the construction of the sewers. Streets, sidewalks, parkways and other property disturbed in the course of the work, shall be reinstalled in a manner satisfactory to the district. The applicant or contractor may be required to post a bond to guarantee that repairs to the sewer or to any property disturbed will be made for a period of one year.

(Ord. S-82 § 5-8)

5.04.480 Design and construction standards.

The minimum standards for design and construction of sewers within the district shall be in accordance with the plans, standards and specifications for Cambria Assessment No. 1, except where requirements of the state or county are more restrictive, in which case the state or county requirements shall govern. The administration, inspection, enforcement and acceptance shall be by the district. The district may permit modifications or may require higher standards. Before acceptance of any sewer by the district, the sewer shall have been tested and all work shall have been completed in full compliance with the standards and the satisfaction of the district's engineer.

(Ord. S-82 § 5-9)

5.04.490 Oversized public sewers.

When a person is required by the district to install a sewer more than one pipe size larger than required to serve the persons land, the district may either proceed under the provisions of the section on main extensions or may enter into an agreement to pay for the oversizing from funds of the district. The cost of the oversizing to be collected when the lands benefiting from the oversizing are connected to the sewer system.

(Ord. S-82 § 5-10)

5.04.500 Main extension.

When a person, in order to serve his or her land, is required to construct a public sewer through or adjacent to land which for any reason is not entitled to connect to the proposed sewer, the person may receive a refund of the cost of the sewer providing the person enters into a written agreement with the board. The agreement shall provide that the person will submit plans and specifications and obtain district approval; shall provide any

easements required; shall furnish the board certified copies of the cost of the sewer, including costs of engineering and inspection. The board will agree that any person connecting to the main extension shall pay all fees, connection, annexation and other charges as required by this chapter. The board will agree that a portion of the above charges shall be reimbursed to the person who paid for the main extension or to his or her assigns. The amount to be paid for each connection shall not exceed an agreed percentage of the installation costs. No interest shall be paid on such refunds and the term of the agreement shall not exceed ten (10) years. The district shall determine the size of the main extension, the location and size of the wyes and such other appurtenants as may be required.

(Ord. S-82 § 5-11)

Article VI. Permits and Fees

5.04.510 Permit required for connecting with, opening into, altering or disturbing any public sewer system.

No person shall uncover, make any connections with or opening into, use, alter or disturb any public sewer or appurtenance without first obtaining a written permit from the district.

(Ord. S-82 § 6-1)

5.04.520 Application for permit.

Any person legally entitled to apply for and receive a permit shall make such application on forms provided by the district for that purpose. He or she shall give a description of the character of the work proposed to be done and the location, ownership, occupancy and use of the premises in connection therewith. The manager may require plans, specifications or drawings and such other information as he or she may deem necessary.

If the manager determines that the plans, specifications, drawings, descriptions or information furnished by the applicant are in compliance with the ordinances, rules and regulations of the district, he or she shall issue the permit applied for upon payment of the required fees as listed in this chapter.

(Ord. S-82 § 6-2)

5.04.530 Compliance with permit.

After approval of the application, evidenced by the issuance of a permit, no change shall be made in the location of the sewer, the grade, materials, or other details from those described in the permit or as shown on the plans and specifications for which the permit was issued except with written permission from the district, the manager or other authorized representative.

(Ord. S-82 § 6-3)

5.04.540 Application for permit is an agreement.

The applicant's signature on an application for any permit, shall constitute an agreement to comply with all of the provisions, terms and requirements of this chapter and other ordinances, rules and regulations of the district, and with the plans and specifications he or she has filed with his or her application, if any, together with such corrections or modifications as may be made or permitted by the district, if any. Such agreements shall be

binding upon the applicant and may be altered only by the district upon written request for the alteration from the applicant.

(Ord. S-82 § 6-4)

5.04.550 Classes of permits.

There shall be classes of permits as follows:

A. Residential or commercial building sewer permit;

B. Public sewer construction permit;

C. Special permit issued with the approval of the board.

(Ord. S-82 § 6-5)

5.04.560 Annexations.

An annexation fee shall be paid by the owner or owners of the annexing territory as prescribed elsewhere in this chapter.

(Ord. S-82 § 6-6)

5.04.570 Connection charges and service charges.

All connection charges and service charges shall be paid in the manner and amounts specified in the District Fee Schedule.

(Amended during 2004 codification; Ord. S-82 § 6-7)

5.04.580 Inspection fees.

Fees for inspection of building sewer, lateral sewers, public sewers and related facilities including but not limited to pump stations, force mains, preliminary treatment facilities, grease or other interceptors, abandonment of septic tanks, cesspools or drywells shall be as specified in this chapter or as determined by the board.

(Ord. S-82 § 6-8)

5.04.590 Faithful performance bond.

Prior to the issuance of a permit for lateral sewer construction, the applicant shall furnish to the district a faithful performance bond or cash in the amount of one hundred (100) percent of the estimated cost of the work for each construction job. Where the contractor is performing construction on a year around basis within the Cambria Community Services District, the contractor may either choose to provide a faithful performance bond or cash as stated hereinabove for each job or provide an annual faithful performance bond or cash in the amount of three thousand dollars ($3,000.00), the bond to be secured by a surety satisfactory to the district general manager or authorized representative. The cash deposit or faithful performance bond shall be conditioned upon the performance of the terms and conditions of the permit and shall guarantee the correction of faulty workmanship and the replacement of defective materials for a period of three years after the date of acceptance. The general manager or authorized representative, may require a higher bond or deposit based on specific installations or past contractor performance. In the event the general manager or authorized representative determines that the

lateral sewer installation is faulty or contains defective materials, the contractor shall correct the defect within thirty (30) days of notice by the district. In the event the contractor fails to correct the defect within the prescribed thirty (30) days, the general manager or authorized representative is authorized to utilize the faithful performance bond or cash deposit to correct the defect.

(Ord. 2-96 § 3)

5.04.600 Disposition of fees.

All fees collected on behalf of the district shall be shown as revenue in the proper account and the funds deposited in the manner provided by the district.

(Ord. S-82 § 6-10)

5.04.610 All work to be inspected.

All sewer construction work and building sewers shall be inspected by an inspector acting for the district to ensure compliance with all requirements of the district. No sewer shall be covered at any point until it has been inspected and passed for acceptance. No sewer shall be connected to the district's public sewer until the work covered by the permit has been completed, inspected and approved by the inspector. If the test proves satisfactory, the inspector shall issue a certificate of satisfactory completion.

(Ord. S-82 § 6-11)

5.04.620 Written notice may be required.

It shall be the duty of the person doing the work authorized by permit to notify the district that the work is ready for inspection. District may require the notice to be given in writing. Such notification shall be given not less than forty-eight (48) hours before the work is to be inspected. It shall be the duty of the person doing the work to make sure that the work will stand the test required by the district before giving the above notification. When the inspector finds the work not ready for inspection or when the required test fails, the manager may require an additional fee prior to reinspection or retest.

(Ord. S-82 § 6-12)

5.04.630 Condemned work.

When any work has been inspected and the work condemned and no certification of satisfactory completion given, a written notice to that effect shall be given, instructing the owner of the premises, or the agent of such owner, to repair the sewer or other work authorized by the permit in accordance with the ordinances, rules and regulations of the district.

(Ord. S-82 § 6-13)

5.04.640 All costs paid by owner.

All costs and expenses incident to the installation and connection of any sewer or other work for which a permit has been issued shall be borne by the owner. The owner shall indemnify the district from any loss or damage that may directly or indirectly be occasioned by the work.

(Ord. S-82 § 6-14)

5.04.650 Sewer service outside the district.

The district will not grant permission to connect any lot or parcel of land outside the boundary of the district except that with the permission of the board lands belonging to the state of California or to the federal government may be served under the terms of an agreement and the payment of fees and charges approved by the board.

(Ord. S-82 § 6-15)

5.04.660 Street excavation permit required.

A separate permit must be secured from the San Luis Obispo Road Department, the California Department of Transportation, or any other authority having jurisdiction thereover by owners or contractors intending to excavate in public ways for the purpose of installing sewers or making sewer connections.

(Ord. S-82 § 6-16)

5.04.670 Liability.

The district and its officers, agents and employees shall not be answerable for any liability or injury or death to any person or damage to any property arising during or growing out of the performance of any work by any such applicant. The applicant shall be answerable for, and shall save the district and its officers, agents and employees harmless from any liability imposed by law upon the district or its officers, agents or employees, including all costs, expenses, fees and interest incurred in defending same or in seeking to enforce this provision. Applicant shall be solely liable for any defects in the performance of his or her work or any failure which may develop therein. Applicant shall obtain property and liability insurance in amounts satisfactory to the district and shall furnish the district with a certificate of the issuance.

(Ord. S-82 § 6-17)

5.04.680 Time limit on permits.

If work under a permit is not commenced within six months from the date of issuance or if after partial completion, the work be discontinued for a period of six months, the permit shall therefore become void and no further work shall be done until a renewal of the permit shall have been secured. A ten (10) percent renewal fee shall be paid upon issuance of the renewed permit. Nothing in this section shall be deemed to extend the thirty (30) day period within which a sewer connection must be made under Article III of this chapter.

(Ord. S-82 § 6-18)

5.04.690 Denial of new water and sewer permits for persons with existing unpaid delinquent bills.

A. Any person or persons who has a delinquent Community Services District bill will not be permitted to acquire a water or sewer permit until their delinquent bill, including any penalty charges, reconnection charges and deposit have been paid in full as prescribed by existing provisions.

B. Any person or persons who has not paid their delinquent Community Services District bill and who has requested to be placed on the district's water and sewer permit allocation list will be removed from the list at the end of the fifteen (15) day delinquent (red card) billing period and relinquish their position on the list.

(Ord. 5-82 §§ 1,2)

Article VII. Enforcement and Penalties

5.04.700 Liability for violation of ordinances, rules and regulations.

Any person found to be violating any provisions of this chapter or any other ordinance, rule or regulation of the district, may be served by the manager or other authorized person with written notice stating the nature of the violation and providing a reasonable time limit for the satisfactory correction thereof. All persons shall be held responsible for any and all acts of agents or employees done under the provision of this chapter or any other ordinance, rule or regulation of the district. Upon being notified by the manager of any defect arising in any sewer or of any violation of this chapter, the person or persons having charge of the work shall immediately correct the same.

(Ord. S-82 § 7-1)

5.04.710 Continued violation a public nuisance.

Continued habitation of any building or continued operation of any industrial facility in violation of the provisions of this chapter or any other ordinance, rule or regulation of the district is declared to be a public nuisance. The district may cause proceedings to be brought for the abatement of the occupancy of the building or industrial facility during the period of such violation.

(Ord. S-82 § 7-2)

5.04.720 Disconnection for violation.

As an alternative method of enforcing the provisions of this chapter or any other ordinance, rule or regulation of the district, the manager shall have the power to disconnect the user or subdivision sewer system from the sewer mains of the district. The manager shall also have the right to discontinue water service to the property where the violation is occurring. Upon disconnection, the manager shall estimate the cost of disconnection and reconnection to the system, and such user shall deposit the cost as estimated, of disconnection and reconnection before such user is reconnected after payment of all costs of disconnection and reconnection.

(Ord. S-82 § 7-3)

5.04.730 Habitation of disconnected premises forbidden.

During the period of such disconnection, habitation of such premises by human beings shall constitute a public nuisance, whereupon the district shall cause proceedings to be brought for the abatement of the occupancy of the premises by human beings during the period of such disconnection. In such event, and as a condition of reconnection, there is to be paid to the district a reasonable attorney's fee and cost of suit arising in the action.

(Ord. S-82 § 7-4)

5.04.740 Means of enforcement.

The district declares that the foregoing procedures are established as a means of enforcement of the terms and conditions of its ordinances, rules and regulations and not as a penalty.

(Ord. S-82 § 7-5)

5.04.750 Violation of ordinances, rules and regulations is a misdemeanor.

Pursuant to Section 6523 of the Health and Safety Code of the state of California, the violation of any of the provisions of an ordinance, rule or regulation of the district by any person shall be punishable by a fine not to exceed one thousand dollars ($1,000.00), imprisonment not to exceed one month, or both. Each and every connection or occupancy in violation of any ordinance, rule and regulation of the district shall be deemed a separate violation and each and every day or part of a day a violation of the ordinance, rule or regulation continues shall be deemed a separate offense hereunder and shall be punishable as such.

(Ord. S-82 § 7-6)

5.04.760 Violator liable for any expense loss or damage to the district.

Any person violating any of the provisions of the ordinances, rules or regulations of the district shall become liable to the district for any expense, loss or damage occasioned by the district by reason of such violation.

(Ord. S-82 § 7-7)

Article VIII. Inspection, Connection, Annexation, Service and Permit Fees

5.04.770 Sewer connection fee.

A. For purposes of interpreting this section, the following terms shall be defined as in Section 5.04.010:

   1. Project;
   2. Equivalent dwelling unit ("EDU");
   3. Table of equivalent dwelling units;
   4. Summer season;
   5. Commercial project.

B. Except as provided in subsection C of this section, a sewer connection fee shall be assessed against all projects, payable in advance of project sewer connection. The connection fee shall be based upon the number of equivalent dwelling units (EDUs) assigned to the project from the table of equivalent dwelling units. When a project does not conveniently fit into any of the categories delineated in the table of EDUs, the general manager shall compute the required EDUs by developing a project average monthly summer season water demand estimate and then converting to EDUs. The sewer connection fee is defined in the District Fee Schedule.

C. Where the sewer connection fee is shown as having been paid in connection with Cambria Assessment District No. 1, or other numbered district, no additional sewer connection fee shall be paid unless the lot or parcel is divided subsequent to the formation of the above assessment district containing the lot or parcel.

D. Connection fees are subject to the annual percentage increase provided in Title 3 of this code.

E. Commercial project condominium sewers and appurtenances connected to the sewer main extended under the property shall have that portion of the sewer line maintained by the owners of the common area of the project, such as condominium association which, along with the individual owners, shall be responsible for all

liabilities. Where the condominium owners choose not to have an association, then each unit must have a separate sewer lateral connected to the adjacent sewer main.

F. In the event the parcel on which a project is proposed already is connected to the district sewer system, the connection fee will be based upon the net increase in EDUs (as determined by the general manager) attributable to the parcel as a result of the new project. If there is no net increase in EDUs attributable to a parcel with existing district sewer service as a result of a new project, there will be no new connection fee or refund of previously paid connection fees.

(Amended during 2004 codification; Ord. 1-86 § 3: Ord. S-82 § 8-3)

5.04.780 Tax dated real property.

A parcel which was assessed during improvement district proceedings for the collection system, but upon which the assessment was not paid because the parcel was deeded to the state for non-payment of taxes, will incur an additional charge equal to the assessment involved for that parcel.

(Ord. S-82 § 8-3.1)

5.04.790 Unassessed real property tax-deeded to the state.

A parcel which was not assessed during improvement district proceedings for the collection system because such parcel had previously been tax-deeded to the state, shall incur an additional charge equal to the assessment which would have been levied upon it had such parcel been assessed in the manner in which parcels of like kind were assessed during the proceedings.

When such parcel is subsequently redeemed, or purchased from the state by operation of law, or otherwise lawfully acquired, the person thus acquiring title thereto may pay the additional charge in full at the time such title is acquired, or as provided in Section 5.04.790.

(Ord. S-82 § 8-3.2)

5.04.800 Payment of charges made in lieu of an assessment.

Whenever a charge is made against a lot or parcel under conditions set forth in Section 5.04.770 or Section 5.04.780, the owner thereof, subject to the approval of the board as set forth in a letter of agreement between the board and the owner, may elect to pay such charges in five equal annual installments together with such interest at ten (10) percent per year, penalties, costs, and fees as may be required by law or this chapter.

(Ord. S-82 § 8-3.3)

5.04.810 Determination of benefit units.

All property shall have the benefit units and assessment determined in accordance with the following:

A. Any property two thousand (2,000) square feet in area, or less equals one benefit unit.

B. Any property two thousand one (2,001) square feet to five thousand (5,000) square feet in area equals 1.2 benefit units.

C. Any property over five thousand (5,000) square feet in area will be assessed 0.1 benefit units for each additional one thousand (1,000) square feet of area in addition to the basic benefit unit charge - 1.2 benefit units + 0.1 (No. of Ft^2 /1,000 ft^2) benefit units.

D. Property will be assessed only to a depth of two hundred (200) feet.

A lateral will be furnished at no cost to the served property through which there is a sewer easement, provided, however, that such laterals will be constructed within the easement and will not be constructed beyond the easement boundary.

E. A connection fee is defined in the District Fee Schedule and will be assessed to each property being served by the collection system and the treatment plant. The connection fee is based on a four inch lateral installed according to district requirements at owners expense.

F. Property will be assessed only to a depth of two hundred (200) feet.

G. Zero benefit units will be assigned to any lot or parcel in the assessment district that is not benefited by the collection system.

H. The engineer will determine how corner properties and properties which are exceptions will be assessed to most equitably serve both the property and the assessment district.

(Amended during 2004 codification; Ord. S-82 § 8-6)

5.04.820 Sewer service charge to unoccupied property.

After a property has been connected to a sewer system, sewer service charges shall continue to accure whether the property is occupied or not, unless the improvements thereon are removed or destroyed.

(Ord. S-82 § 8-8)

5.04.830 Sanitation funds.

Money received from permits, inspection, plan check, connection, annexation or other fees and from sewer service charges shall be deposited in the fund accounts as hereinafter designated and the expenditures from the funds shall be in accordance with the uses permitted.

(Ord. S-82 § 8-9)

5.04.840 Operating account.

This account shall receive all monies from permits, inspection, plan check fees, sewer service charges, penalties and miscellaneous revenue including gifts and grants to the district for purposes detailed below.

The monies so received shall be used for operation, maintenance, and repairs to the wastewater facility including the collection system and water quality control plant. Also included are supplies, tools, spare parts, chemicals, salaries, laboratory equipment and supplies, training of personnel, dues to organizations related to liquid waste disposal and cost of attending conferences and a reasonable amount for general and administration expenses.

Expenditures from this operating account shall not be used for capital purposes.

Expenditures from the operating account shall be based on an annual budget prepared by the manager and approved by the board. The budget shall contain sufficient detail to enable proper control of the operating funds. The budget will contain a reasonable sum for contingencies.

All income from the source listed above which is in addition to the amount budgeted shall be placed in the capital improvement account.

(Ord. S-82 § 8-10)

5.04.850 Capital improvement account.

This account shall receive all monies from connection and annexation fees, interest on capital funds, gifts and grants to the district for capital improvements, surplus revenue from the operating account as determined above.

The monies so received shall be used only for capital improvements such as enlarging the water quality control plant, installing larger pump stations, installing new or larger sewer pipes, force mains or related facilities, repayment to the district of funds advanced from water revenue, to repay loans or advances from any source borrowed to finance capital improvements or for placing in a special fund to be used to guarantee the repayment of principal and interest on bonds issued pursuant to any improvement act proceedings, purchase of land for plant enlargement or for water reclamation processes, to pay for engineering, administration, legal or other costs related to any capital improvements of the wastewater facilities.

Funds in the capital improvement account shall be deposited in interest bearing accounts in a manner approved by the board. Expenditures from this account shall be based on a budget or on an engineer's estimate which has been approved by the board.

Nothing in this section shall prevent the board from authorizing expenditure of capital improvement fund to repair damage caused by a catastrophic event where the health of the community is endangered and when other funds are not available.

(Ord. S-82 § 8-11)

5.04.860 Division of land and bond.

To ensure proper planning, administrative, and fiscal controls over use of public sewers and orderly community development, if any lot or parcels of land upon which there is an unpaid assessment is proposed to be divided, either by means of lot split provisions or the Subdivision Map Act, the owner of the lot or parcel shall make application in writing to the district, indicating the proposed division by a map or sketch.

Upon submittal of the application to the district, the owner will initiate action at the county tax collector's office to have the lot or parcel separately valued for tax and assessment purposes.

Upon submittal of the application, the district will inform the owner of any requirements to be met in fulfilling the provisions of district ordinances, rules, and regulations with respect to the installation of new on-site water or sewer lines, fire hydrants, safety devices, and the like, or improvement to such existing on-site facilities. The cost of such installation or improvement to be borne by the owner; and the district will inform the owner that the county planning director will require the owner to submit, with his or her preliminary map, a letter from the district setting forth the availability of water and sewer facilities required for the proposed lot split or subdivision, which letter the district will furnish upon request of the owner and his or her agreement to fulfill the requirements of the aforesaid ordinances, rules and regulations.

(Ord. S-82 § 8-12)

Article IX. Bills, Delinquencies and Collections

5.04.870 Rendering of sewer bills.

The sewer service charge and other charges shall be sent to the owner of the property, except that where the owner of the property has made arrangements with the manager by letter or on forms provided to have the bills sent to the occupant of the property or to the owner's agent. However, in case of nonpayment of bills, the property owner shall be liable for the payment of the bills and any penalties. Sewer bills sent with the water bill, shall be itemized separately, and shall cover the same period of time as the water bill.

(Ord. S-82 § 9-1)

5.04.880 Commencement of service charge.

The service charge shall accrue beginning on the first day of the month following the connection to the sewer system or following the beginning of water service, which ever is later.

Existing improved property in an assessment district shall accrue a sewer service charge on the first of the month following connection to the sewer system.

(Ord. S-82 § 9-2)

5.04.890 Discontinuance of sewer service.

If all the delinquent bills, administrative charges and penalties have not been paid to the required amount within fifteen (15) days after the posting of the notice of disconnection, the manager shall disconnect the sewer where such property has been previously served by a sewer, or the manager may discontinue water service to the property, and shall post on the property a notice that the property shall not be occupied or used by human beings or any wastewater produced thereon until the sewer is reconnected. The cost of disconnecting the sewer and reconnecting it, together with all other amounts due, must be paid in cash or cashier's check or certified check at the time application is made for reconnection. It is unlawful for any person to inhabit a disconnected property or produce any wastewater thereon until the property has been reconnected. Service charges shall continue to accrue during the period of such disconnection.

(Ord. S-82 § 9-4)

5.04.900 Termination of service upon abandonment.

In the event all structures in which wastewater is produced are removed from a property served by the sewer system, or in the further event that all structures in which wastewater may be produced are permanently abandoned and are not used, the manager may terminate service to the property if the manager deems such abandonment to be permanent. Services charges shall thereupon be suspended. The manager shall, if he or she deems it necessary to protect the wastewater system, physically plug the lateral sewer at its connection to the building sewer and the cost of plugging and reconnecting shall be paid prior to restoring service to the property. Thereafter, the property shall not be occupied by humans nor shall any wastewater be produced thereon until service has been restored as herein provided. If the property is occupied by human beings or any wastewater is produced thereon before the service has been restored, the manager shall have authority to disconnect the property without further notice.

(Ord. S-82 § 9-5)

5.04.910 Delinquent charges to become a lien.

Charges of any kind more than sixty (60) days delinquent plus penalties and interest thereon when recorded as provided in Article IV, Chapter 6 of Part 3 of Division 5, Health and Safety Code of California, shall constitute a lien upon the real property served, except that no such lien shall be created against any publicly owned property. Such lien shall continue until the charge, penalties, and interest thereon are fully paid, or until the property is sold therefore, or until otherwise extinguished by operation of law.

In the event that a lien is filed, or any action at law is commenced for the collection of such delinquent charge, the district shall compute the amount of the charge plus penalties, disconnection fees, and interest on the sum thereof at the rate of one-half of one percent per month from the date of delinquency, and shall report the total of such computation to the county auditor for inclusion on the tax rolls. A copy of such report shall be recorded with the county recorder.

(Ord. S-82 § 9-6)

5.04.920 Prepayment of delinquent and other charge prior to reconnection.

After a building sewer has been disconnected from the sewer system, it shall not be reconnected until all delinquent charges plus penalties, all charges which have accrued since the time of disconnection, and the estimated cost of reconnection have been paid and any required guarantee for the payment of bills has been made, except as otherwise provided herein. All amounts required to be paid shall be paid before the building sewer is reconnected to the sewer system.

(Ord. S-82 § 9-7)

5.04.930 Addition of unpaid fees and charges to the tax roll.

On or before July 15th of each calendar year, the general manager shall prepare a list of persons owing connection fees, service charges, penalties and other charges. The manager, immediately upon preparing such a list, shall follow procedures for notice and hearing set forth in Article IV of Chapter 6 of Part 3 of Division 5 of the Health Safety Code of the state of California and upon the completion of same, a delinquent list shall be transmitted before August 10th of such year to the county auditor for addition to the assessment roll as provided for in Article IV of Chapter 6 of Part 3 of Division 5 of the Health and Safety Code of the state of California.

(Ord. S-82 § 9-8)

Appendix D

Wastewater Ordinance S-82

CAMBRIA COMMUNITY SERVICES DISTRICT

WASTEWATER ORDINANCE S-82

WASTEWATER ORDINANCE S-82

CONTENT Page

Article 1	Definitions	1 - 3
Article 2	General Provisions	3 - 5
Article 3	Use of Public Sewers Required	5 - 8
Article 4	Building Sewers, Lateral Sewers and Connections	9 - 11
Article 5	Public Sewer Construction	11 - 13
Article 6	Permits and Fees	13 - 15
Article 7	Enforcement and Penalties	16 - 17
Article 8	Inspection, Connections	17 - 21
Article 9	Bills, Delinquencies and Collections	21 - 23

ORDINANCE S-82

An Ordinance to Amend Ordinance S-72

"An Ordinance of the Cambria Community Services District regulating the use of Public Sewers, the installation and connection of building Sewers, the discharge of waters and wastes into the Public Sewer System; providing penalties for the violations thereof; adopting by reference the 1979 edition of the Uniform Plumbing Code of the International Association of Plumbing and Mechanical Officials (IAPMO), and establishing fees and rates for the connection to the use of Public Sewers."

Be it ordained and enacted by the Cambria Community Services District located in Cambria, State of California, as follows:

Article 1
Definitions

Sec. 1-1 Applications of Definitions: All of the herinafter definitions shall be used in construing all Ordinances and amendments thereto of this District, pertaining to sewers and sewage, regardless of the time of enactment unless the same shall specify a different meaning for such word or words.

Sec. 1-2 Applicant: Shall mean the person making application for a permit for a sewer installation and shall be the owner of the premises to be served by the sewer for which a permit is requested, or his authorized agent.

Sec. 1-3 Assessment District: Shall mean Cambria Sewer Assessment Districts No. 1 and No. 2 created under the provisions of the Streets and Highway Code of the State of California. Additional assessment districts, if created, shall be identified by number such as Sewer Assessment District No. 3.

Sec. 1-4 Board: Shall mean the Board of Directors of the Cambria Community Services District.

Sec. 1-5 "BOD" (denoting Biochemical Oxygen Demand): Shall mean the quantity of Oxygen utilized in the biochemical oxidation of organic matter under standard laboratory procedure in five (5) days at 20^{0} degrees Centigrade, expressed in milligrams per liter.

Sec. 1-6 Building: Shall mean any structure used for human habitation or a place of business, recreation or other purpose containing sanitary facilities.

Sec. 1-7 Building Drain: Shall mean that part of the lowest horizontal piping of a drainage system which receives the discharge from soil, waste, and other drainage pipes inside the walls of the building and conveys it to the building sewer, beginning two (2) feet outside the building wall.

Sec. 1-8 Building Sewer: Shall mean that portion of any sewer beginning two feet outside the building wall of any building or industrial faciltiy and running to the property line.

Sec. 1-9 Code: Shall mean the 1979 edition of the Uniform Plumbing Code published by the International Association of Plumbing and Mechanical Officials.

Sec. 1-10 Contractor: Shall mean a person duly licensed by the State of California to perform the type of sewer work to be done under the permit and approved by the District.

Sec. 1-11 District: Shall mean the Cambria Community Services District.

Sec. 1-12 Engineer: Shall mean the District Engineer appointed by and acting for the District.

Sec. 1-13 Equivalent Connection: Shall mean a source of wastewater equal in daily volume and quality to that produced in a single family dwelling, considered to be 240 gallons per 24-hour day.

Sec. 1-14 Garbage: Shall mean solid wastes from the domestic and commercial preparation, cooking, and dispensing of food, and from the handling, storage, and sale of produce.

Sec. 1-15 Industrial Wastes: Shall mean the liquid wastes from industrial manufacturing processes, trade, or business as distinct from sanitary sewage.

Sec. 1-16 Inspector: Shall mean a person acting for the District in the capacity of an inspector and may be the General Manager, or his authorized representative.

Sec. 1-17 Lateral Sewer: Shall mean the portion of a sewer lying within a public way or easement connecting a building sewer to the main sewer.

Sec. 1-18 Main Sewer: Shall mean a public sewer designed to accommodate more than one lateral sewer.

Sec. 1-19 Manager: Shall mean the General Manager of the Cambria Community Services District.

Sec. 1-20 Permit: Shall mean any written authorization required pursuant to this or any other regulation of the District for the installation of any sewage works.

Sec. 1-21 Person: Shall mean any human being, individual, firm, company, partnership, association and private or public and municipal corporation, the United States of America, the State of California, districts and all political subdivisions, governmental agencies and mandatories thereof.

Sec. 1-22 "pH": Shall mean the logarithm of the reciprocal of the weight of hydrogen ions in grams per liter of solution.

Sec. 1-23 Properly Shredded Garbage: Shall mean the wastes from the preparation, cooking, and dispensing of food that have been shredded to such a degree that all particles will be carried freely under the flow conditions normally prevailing in public sewers, with no particle greater than one-half (½) inch (1.27 centimeters) in any dimension.

Sec. 1-24 Public Sewer: Shall mean a sewer lying within a public way or an easement in which all owners of abutting properties have equal rights, and is controlled by the District.

Sec. 1-25 Sanitary Sewer: Shall mean a sewer which carries wastewater and to which storm, surface, and ground waters are not intentionally admitted.

Sec. 1-26 Wastewater System: Shall mean all facilities for collecting, pumping, treating, and disposing of wastewater.

Sec. 1-27 Sewer: Shall mean a pipe or conduit for carrying wastewater.

Sec. 1-28 "SHALL" is mandatory; "MAY" is permissive.

Sec. 1-29 Superintendent: Shall mean the Water Quality Superintendent who under the general supervision of the Manager, operates and maintains the wastewater system.

Sec. 1-30 Wastewater: Shall mean a combination of the water-carried wastes from residences, business buildings, instititions, and industrial establishments.

Sec. 1-31 Water Quality Control Plant: Shall mean the plant which treats and disposes of wastewater.

Article 2
General Provisions

Sec. 2-1 Uniform Plumbing Code: The 1979 Edition of the Uniform Plumbing Code, published by the International Association of Plumbing and Mechanical Officials is hereby adopted by reference. Copies of said Code shall be on file in the Office of the Cambria Community Services District. The provisions of the Code shall govern for all wastewater and/or sanitary construction work, under the jurisdiction of the Cambria Community services District unless modified by provisions of this Ordinance. In all cases, the most recent edition of the Code shall be used when the Board has adopted said edition and provided office copies of said Code. The 1979 edition shall govern until a later edition is adopted by the Board.

Sec. 2-2 Ordinance Not Retroactive: This Ordinance is intended to provide rules and regulations for the use and construction of sanitary facilities hereinafter installed. Unless otherwise specified, no provision of this Ordinance shall apply retroactively. If, however, alterations or repairs are made, this Ordinance shall apply to materials and methods used in such alterations. Notwithstanding the above the Board may require correction of existing sanitary facilities which violate provisions of this Ordinance.

Sec. 2-3 Existing Rules Repealed: Upon the effective date of this Ordinance all existing rules, orders, motions and policies of the Cambria Community Services District, concerning wastewater and/or sanitary construction work are rescinded and this Ordinance shall govern.

Sec. 2-4 Violation Unlawful: Following the effective date of this Ordinance, it shall be unlawful for any person to connect to, construct, install or provide, maintain and/or use any other means of wastewater disposal from any building in said District except by connection to a public sewer in the manner as in this Ordinance provided, when such public sewer has been constructed and accepted for use and is within 200 feet of the property containing said building.

Sec. 2-5 Relief on Application: When any person by reason of special circumstances thinks that any provision of this Ordinance is unjust or inequitable as applied to his premises, he may make written application to the Board, stating the special circumstances, citing the provision complained of, and requesting suspension as applied to his premises. If the Board makes findings, the Board may, by motion, suspend or modify the provision complained of, as applied to such premises, to be effective as of the date of the application and continuing during the period of the special circumstances.

Sec. 2-6 Relief on Own Motion: The District may, on its own motion, find that by reason of special circumstances any provision of this regulation and ordinance should be suspended or modified as applied to a particular premise during the period of such circumstances, or any part thereof.

Sec. 2-7 Connection Required: The owner of all houses, buildings, or properties used for human occupancy, employment, recreation, or other purposes, situated within the District and abutting on any street, alley, or right-of-way in which there is now located or may in the future be located a public sewer of the District, is hereby required at his expense to connect such facilities directly with the proper public sewer in accordance with the provisions of this ordinance, within ninety (90) days after date of official notice to do so, provided that said public sewer is within two hundred (200) feet of the property line.

Sec. 2-8 Permits Required and Fees Paid Before Commencement of Work: No public sewer, lateral sewer, building drain, or other sanitary facilities shall be installed, altered or repaired within the District until a permit for the work has been obtained from the District and all fees paid in accordance with the requirements of this Ordinance.

Sec. 2-9 Powers and Authorities of Inspectors: The Manager and any duly authorized employees of the District shall be permitted, upon showing evidence of his position, to enter private property for the purpose of inspection, reinspection, observation, measurement, sampling, testing or otherwise performing such duties as may be necessary in the enforcement of the provisions of the ordinances, rules and regulations of the District.

Sec. 2-10 Protection from Damage: No person shall maliciously, willfully, or negligently break, damage, destroy, uncover, deface or tamper with any structure, appurtenance or equipment which is a part of the District wastewater facilities. Any person violating this provision shall be subject to the penalties provided by law.

Sec. 2-11 Separability: If any section, sub-section, sentence, clause or phrase of this ordinance or the application thereof to any person or circumstances is for any reason held to be unconstitutional or invalid, such decision shall not affect the validity of the remaining portions of this ordinance of the application of such provision to other persons or circumstances. The Board hereby declares that it would have passed this ordinance or any section, sub-section, sentence, clause or phrase hereof irrespective of the fact that any one or more sections, sub-sections, sentences, clauses or phrases be declared to be unconstitutional.

Article 3
Use of Public Sewers Required

Sec. 3-1 Disposal of Wastes: It shall be unlawful for any person to place, deposit, or permit to be deposited upon public or private property within the District, or in any area under the jurisdiction of said District, any human excrement or other objectionable waste.

Sec. 3-2 Treatment of Wastes Required: It shall be unlawful to discharge to any stream or water course, any wastewater, industrial wastes or other polluted waters, except where suitable treatment has been provided in accordance with provisions of this Ordinance.

Sec. 3-3 When Connection to Public Sewer Required: The owner of any real property with any building, structure or other improvement thereon which is suitable for use or occupancy by human beings is required to connect the same directly with the proper public sewer in accordance with the provisions of this Ordinance within ninety (90) days after receipt of written notice to do so if there is a sewer main within 200 feet of the nearest point of any such building, structure or other improvement. If such sewer main is not available within said 200 foot distance at the time of the enactment of this section, the duty to connect will nonetheless arise at such future time as there is a sewer main within 200 feet of the nearest point of such building, structure or other improvement and notice is given as provided in this Section. In the case of a newly constructed building, structure or other improvement thereon, the same shall be deemed a building suitable for occupancy and/or use within the meaning of this Section at such time as such building, structure or other improvement is offered for sale or within thirty (30) days after its construction is completed, whichever is sooner.

Sec. 3-4 Drainage into Sanitary Sewers Prohibited: No leaders from roofs and no surface drains for rain water shall be connected to any sanitary sewer. No surface or sub-surface drainage, rain water, storm water, seepage, cooling water of industrial origin or unpolluted industrial process waters shall be permitted to enter any sanitary sewer by any device or method whatsoever.

Sec. 3-5 Types of Wastes Prohibited: No person shall discharge or cause to be discharged any of the following described waters or wastes to any public sewers:

(a) Any gasoline, benzene, naphtha, fuel oil, or other flammable or explosive liquid, solid, or gas.

(b) Any waters or wastes containing toxic or poisonous solids, liquids, or gases in sufficient quantity, either singly or by interaction with other wastes, to injure or interfere with any wastewater treatment process, constitute a hazard to humans or animals, create a public nuisance, or create any hazard in the receiving waters of the wastewater treatment plant, including but not limited to cyanides in excess of two (2) mg/l as CN in the wastes as discharges to the public sewer.

(c) Any waters or wastes having a pH lower than (5.5), or having any other corrosive property capable of causing damage or hazard to structures, equipment, and personnel of the wastewater works.

(d) Solid or viscous substances in quantities or of such size capable of causing obstruction to the flow in sewers, or other interference with the proper operation of the wastewater works such as, but not limited to, ashes, cinders, sand, mud, straw, shavings, metal, glass, rags, feathers, tar, plastics, wood, unground garbage, whole blood, paunch manure, hair and fleshings, entrails and paper dishes, cups, milk containers, etc. either whole or ground by garbage grinders.

Sec. 3-6 Other Wastes Prohibited: No person shall discharge or cause to be discharges the following described substances, materials, waters, or wastes if it appears likely in the opinion of the Manager that such wastes can harm either the sewers wastewater treatment process, or equipment, have an adverse effect on the receiving stream, or can otherwise endanger life, limb, public property, or constitute a nuisance. In forming his opinion as to the acceptablility of these wastes, the Manager will give consideration to such factors as the quantities of subject wastes in relation to flows and velocities in the sewers, materials of construction of the sewers, nature of the wastewaters treatment process, capacity of the wastewater treatment plant, degree of treatabliity of wastes in the wastewater treatment plant, and other pertinent factors. The substances prohibited are:

(a) Any liquid or vapor having a temperature higher than one hundred forty degrees Fahrenheit (140° F).

(b) Any water or waste containing fats, wax, grease, or oils, whether emulsified or not, in excess of one hundred (100) mg/l or containing substances which may solidify or become viscous at temperatures between thirty-two degrees Fahrenheit (32° F) and one hundred fifty degrees Fahrenheit (150° F).

(c) Any garbage that has not been properly shredded so that no particles are greater than one-half inch in any dimension. The installation and operation of any garbage grinder equipped with a motor of three-fourths (3/4) horsepower or greater shall be subject to the review and approval of the Manager.

(d) Any waters or wastes containing strong acid iron pickling wastes, or concentrated plating solutions whether neutralized or not.

(e) Any waters or wastes containing iron, chromium, copper, zinc, and similar objectionable or toxic substances; or wastes exerting an excessive chlorine requirement, to such degree that any such material received in the composite sewage at the wastewater treatment works exceeds the limits established by the Manager for such materials.

(f) Any waters or wastes containing phenols or other taste-or-odor-producing substances, in such concentrations exceeding limits which may be established by the Manager as necessary, after treatment of the composite wastewater, to meet the requirements of the State, Federal, or other public agencies or jurisdiction for such discharge to the receiving waters.

(g) Any radioactive wastes or isotopes of such half-life or concentration as may exceed limits established by the Manager in compliance with applicable State or Federal regulations.

(h) Any waters or wastes having a pH in excess of (9.5).

(i) Materials which exert or cause:

1. Unusual concentration of inert suspended solids (such as, but not limited to, Fullers earth, lime slurries, and lime residues) or of dissolved solids (such as, but not limited to, sodium chloride and sodium sulfate).

2. Excessive discoloration (such as, but not limited to, dye wastes and vegetable tanning solutions).

3. Unusual BOD, chemical oxygen demand, or chlorine requirements in such quantities as to constitute a significant load on the wastewater treatment works.

4. Unusual volume of flow or concentration of wastes constituting "slugs" as defined herein.

(j) Waters or wastes containing substances which are not amenable to treatment or reduction by the wastewater treatment processes employed, or are amenable to treatment only to such degree that the wastewater plant effluent cannot meet the requirements of other agencies having jurisdiction over discharge to the receiving waters.

Sec. 3-7 Manager's Discretion Regarding Waste Discharges: If any waters or wastes are discharged, or are proposed to be discharged to the public sewers, which waters contain the substances or possess the characteristics enumerated in this Article, and which in the judgement of the Manager, may have a deleterious effect upon the wastewater works, processes, equipment, or receiving waters, or which otherwise create a hazard to life or constitute a public nuisance, and/or may cause the District to violate discharge requirements, the Manager may:

(a) Reject the wastes,

(b) Require pretreatment as to an acceptable condition for discharge to the public sewers,

(c) Require control over the quantities and rates of discharge, and/or

(d) Require payment to cover the added cost of handling and treating the wastes not covered by existing taxes or sewer charges under the provisions of this article.

If the Manager permits the pretreatment or equalization of waste flows, the design and installation of the plants and equipment shall be subject to the review and approval of the Manager, and subject to the requirements of all applicable codes, ordinances, and laws.

Sec. 3-8 Interceptors Required: Grease, oil, and sand interceptors shall be provided when, in the opinion of the Manager, they are necessary for the proper handling of liquid wastes containing grease in excessive amounts, or any flammable wastes, sand, or other harmful ingredients; except that such interceptors shall be of a type and capacity approved by the Manager, and shall be located as to be readily and easily accessible for cleaning and inspection.

Sec. 3-9 Maintenance of Interceptors: Where preliminary treatment or flow-equalizing facilities are provided for any waters or wastes, they shall be maintained continuously in satisfactory and effective operation by the owner at his expense.

Sec. 3-10 Control Manhole: When required by the Manager, the owner of any property serviced by a building sewer carrying industrial wastes shall install a suitable control manhole together with such necessary meters and other appurtenances in the building sewer to facilitate observation, sampling, and safely located, and shall be installed by the owner at his expense, and shall be maintained by him so as to be safe and accessible at all times.

Sec. 3-11 Measurement and Tests of Waste Discharge: All measurements, tests, and analyses of the characteristics of waters and wastes to which reference is made in this ordinance shall be determined in accordance with the latest edition of "Standard Methods for the Examination of Water and Wastewater," published by the American Public Health Association, and shall be determined at the control manhole provided, or upon suitable samples taken at said control manhole. In the event that no special manhole has been required, the control manhole shall be considered to be the nearest downstream manhole in the public sewer to the point at which the building sewer is connected. Sampling shall be carried out by customarily accepted methods to reflect the effect of constituents upon the wastewater works and to determine the existence of hazards to life, limb, and property. (The particular analyses involved will determine whether a grab sample or samples should be taken. Normally, but not always, BOD and suspended solids analyses are obtained from 24-hour composites of all outfalls whereas pH's are determined from periodic grab samples.)

Sec. 3-12 Preliminary Treatment of Wastes: Liquids and wastes prohibited by this ordinance may with proper preliminary treatment be permitted in the District facilities. Permission to discharge will only be considered after plans, specifications and other information has been furnished to the Board to indicate that the proposed preliminary treatment reduces, removes or changes the objectionable characteristics or constituents to satisfactory levels. All costs of construction, operation, maintenance, inspection, sampling and testing shall be at the expense of the owner. No construction or connection to the District facilities shall be started until a permit required by the Board, a cash bond to guarantee adequate maintenance and operation of the preliminary treatment facilities.

Sec. 3-13 Special Agreements: No statement contained in this article shall be construed as preventing any special agreement or arrangement between the District and any industrial concern whereby an industrial waste of unusual strength or character may be accepted by the District for treatment, subject to payment therefore, by the industrial concern.

Sec. 3-14 Swimming Pool Waste: No swimming pool waste may be discharged into the District wastewater facilities.

Article 4
Building Sewers, Lateral Sewers and Connections

Sec. 4-1 Permit Required for Connection to Public Sewer: No person shall construct a building sewer, lateral sewer or make a connection with any public sewer without first obtaining a written permit from the District and paying all fees and charges as required and doing the work in accordance with the provisions of this Ordinance.

Sec. 4-2 Construction Requirements: Construction of building and lateral service shall be accomplished according to the California Approved Uniform Plumbing Code as adopted by the Board of Directors.

Sec. 4-3 Separate Sewers Required for Separate Lots: Building sewers and lateral sewers shall only serve one lot or parcel under a single ownership. Every building or industrial facility must be separately connected with a public sewer if such public sewer exists in the street upon which the property abuts or in an easement which will serve said property. However, one or more buildings, located on property belonging to the same owner may be served with the same sewer during the period of said ownership. Upon the subsequent subdivision and sale of a portion of said lot, the portion not directly connected with such public sewer shall be separately so connected with a public sewer, and it shall be unlawful for the owner thereof to continue to use or maintain such indirect connection.

Sec. 4-4 Use of Existing Building Sewers Permitted Only Upon Approval: Old building sewers may be used in connection with new buildings only when they are found, upon examination and test by the Inspector, to meet all requirements of District.

Sec. 4-5 Relations of Building Drain to Sewer Lateral:

(a) Where the building drain is sufficiently higher than the end of the lateral sewer to permit the building sewer to slope in accordance with the provisions of this ordinance and where the lowest floor of the building which contains sanitary facilities is at an elevation above the rim of the closest upstream manhole, no special conditions are imposed.

(b) Where the lowest floor of the building which contains sanitary facilities is at an elevation below the rim of the closest upstream manhole, but gravity flow from the building drain to the end of the lateral sewer is possible, the owner shall either at his cost install a relief valve in the building sewer, at an elevation lower than the above floor elevation or shall agree that the District shall not be responsible for damage caused by an overflow of waste liquid inside the building.

(c) Where gravity discharge of wastewater is not possible, the owner shall install equipment to pump the wastewater to the lateral sewer. The discharge pipe shall not be less than two inches inside diameter and shall contain a suitable method of preventing backflow from the lateral sewer.

Sec. 4-6 Manner of Connection of Building Sewer to Lateral Sewer: The connection of the building sewer into the public sewer shall be made at the lateral sewer if said lateral is available. In easements, connection shall be made at an existing wye. The connection shall be made in the presence of an inspector and under his supervision.

Sec. 4-7 Tests: Building sewers shall be tested by plugging the end of the building sewer at its connection with the lateral sewer and completely filling the building sewer with water so that, with a head of ten feet of water, no loss of water occurs during a fifteen minute period of time.

Sec. 4-8 Abandonment of Private Wastewater Facilities Required When Public Sewer Available: At such time as a public sewer becomes available to a property served by a private wastewater disposal system, as elsewhere provided in this Ordinance, a direct connection shall be made to the public sewer in compliance with the rules and regulations of District and any septic tanks, cesspools and similar private wastewater disposal facilities shall be abandoned and they shall be filled with sand or approved suitable material, in accordance with the provisions of the Code and any requirements of the State and County Health Departments. No work of abandonment shall be done without a permit issued by the District and without the required inspection.

Sec. 4-9 Requirements to Provide Contractor Information: Prior to commencing any installing of building and/or lateral sewers, the contractor must provide the information requested in WWD Form No. 1 Contracting and Permit Requirements for Installing Building and Lateral Sewers within the Cambria Community Services District incorporated herein by reference as Exhibit "A".

Sec. 4-10 Who May Install Building Sewers: Building sewers, together with the related work of connecting the building sewer with the building drain and with the lateral sewer and abandoning septic tanks, cesspools or dry wells shall be done by Plumbing Contractors and/or Sewer Contractors duly licensed by the State of California and such other State licensed contractors whose license includes the right to install sewers. The above Contractors shall be approved by the Manager and may be required to post a bond to guarantee that damage to the District facilities will be repaired. In addition to the above, a property owner shall be granted a permit to install a building sewer on property owned by him provided the Manager is satisfied that he can install and test the building sewer in accordance with the requirements of this ordinance.

Sec. 4-11 Who May Install Lateral Sewers: Lateral sewers may be installed by State licensed plumbing or sewer contractors. Property owners will not be allowed to install lateral sewers. Contractors shall be approved by the Manager or his authorized representative, post a reasonable bond to guarantee their work, show proof of adequate liability insurance and have obtained an encroachment permit from the County Road Department or State Highway if the lateral sewer is in a public street.

Sec. 4-12 Installation of Wyes: When it is necessary to install a wye on a main sewer, the hole in the main sewer pipe shall be cut by an approved sewer tapping machine. The use of chisels to cut the hole will not be permitted. The wye branch shall be a standard vitrified clay pipe manufactured for the purpose and shall be joined to the sewer pipe with an epoxy to form a smooth neat watertight joint with no protrusion into the barrel of the main sewer pipe. All work of cutting and installing shall be done in the presence of an Inspector.

Sec. 4-13 Protection of Excavation: All excavations for a lateral sewer or building sewer shall be adequately guarded with barricades and lights so as to protect the public from hazards. Streets, sidewalks, parkways and other property disturbed in the course of the work shall be restored in a manner satisfactory to the District.

Sec. 4-14 Maintenance of Building Sewers: Building sewers and appurtenances shall be maintained by the owner of the property served. No maintenance or repair of building sewers which involve uncovering or removing the sewer pipe shall be started without securing a permit except in an emergency in which case a permit will be obtained at the first reasonable opportunity and no work covered until an inspection has been made.

Article 5
Public Sewer Construction

Sec. 5-1 Fees and Permit Required Before Connecting to Public Sewers: No person shall construct, extend or connect to any public sewer without first obtaining a written permit from the District and paying all fees and connection charges and furnishing bonds as required. The provisions of this section requiring permits shall not be construed to apply to contractors constructing sewers and appurtenances under contracts awarded and entered into by the District.

Sec. 5-2 Plans, Profiles and Specifications Required to Accompany Permit Application: The application for permit for public sewer construction shall be accompanied by complete plans, profiles and specifications, complying with all applicable ordinances, rules and regulations of District, prepared by a Registered Civil Engineer showing all details of the proposed work based on an accurate survey of the ground. Plans shall include lateral sewers to all lots in a proposed subdivision. The application, together with the plans, profiles and specifications shall be examined by the District Engineer who shall, within ten (10) days, approve them as filed or require them to be modified as he deems necessary for proper installation. After examination by the District Engineer, the application, plans, profiles and specifications shall be submitted to the Board at its next regular meeting for its consideration. When the Board is satisfied that the proposed work is proper and the plans, profiles and specifications are sufficient and correct, it shall order the issuance of a permit predicated upon the payment of all connection charges, fees and furnishing bonds as required by the District. The permit shall prescribe such terms and conditions as the District finds necessary in the public interest.

Sec. 5-3 Subdivisions: Prior to the granting of approval by the District to the recording of a final map or of installing any part of the sewer system, the applicant shall have complied with the preceding three sections and shall have entered into an agreement with the Board to comply with all applicable provisions of this Ordinance and to either pay all fees or to post bonds guaranteeing the payment of all fees prior to an agreed date or an agreed event, such as acceptance of the sewers by the District, or clear statements which agree with statements in the State Real Estate Report that all unpaid fees will be paid by the property owner prior to occupancy of the house or other structure.

All sewers and sewage facilities shall be in streets or rights-of-way dedicated for public use or shall be in easements granted to the Cambria Community Services District. If a final subdivision map of a tract is recorded and the work of constructing sewers to serve the tract is not completed within the time limit allowed in the permit, the Board may extend the time limit or may complete the work and take appropriate steps to enforce the provisions of the bond furnished by the subdivider.

Sec. 5-4 Easements or Rights-of-Way for Extensions or Connections: In the event that an easement is required for the extension of the public sewer or the making of connections, the applicant shall procure and have accepted by the District a proper easement or grant right-of-way sufficient in size to allow the laying and maintenance of such extension or connection. The cost of obtaining said easement or right-of-way shall be paid by the applicant. Should the applicant be unable to obtain the easement or right-of-way by negotiation with the owner or owners, and providing the Board determines that it is to the interest of the District to have said easement or right-of-way, the Board will cause the easement or right-of-way to be condemned and the applicant shall pay all costs incurred by the District.

Sec. 5-5 Persons Authorized to Perform Work: Only properly licensed contractors shall be authorized to perform the work of public sewer construction within the District. All terms and conditions of the permit issued by the District to applicant shall be binding on the contractor. The requirements of this section shall apply to lateral sewers installed concurrently with public sewer construction.

Sec. 5-6 Grade Stakes to be Set by Licensed Civil Engineer or Surveyor: Grade and line stakes shall be set by a Registered Civil Engineer, or by a Licensed Surveyor, prior to the start of work on any public sewer construction. The contractor shall be responsible for accurately transferring grades to grade bars and sewer invert.

Sec. 5-7 Compliance with State, County and District Rules, Regulations and Ordinances Required: Any person constructing a sewer within a public way or easement, shall comply with all State, County, or District laws, ordinances, rules and regulations pertaining to the cutting of pavement, opening, barricading, lighting and protecting of trenches, back-filling and repaving thereof, and shall obtain all permits and pay all fees required by the department having jurisdiction prior to the issuance of a permit by the District.

Sec. 5-8 Protection of Excavation and Restoration after Completion: The applicant shall maintain such barriers, lights and signs as are necessary to give warning to the public at all times that a sewer is under construction and of each dangerous condition to be encountered as a result thereof. He shall also likewise protect the public in the use of the sidewalk against any such conditions in connection with the construction of the sewers. Streets, sidewalks, parkways and other property disturbed in the course of the work, shall be reinstalled in a manner satisfactory to the District. The applicant or contractor may be required to post a bond to guarantee that repairs to the sewer or to any property disturbed will be made for a period of one year

Sec. 5-9 Design and Construction Standards: The minimum standards for design and construction of sewers within the District shall be in accordance with the plans, standards and specifications for Cambria Assessment No. 1, except where requirements of the State or County are more restrictive, in which case said State or County requirements shall govern. The administration, inspection, enforcement and acceptance shall be by the District. The District may permit modifications or may require higher standards. Before acceptance of any sewer by the District, the sewer shall have been tested and all work shall have been completed in full compliance with the Standards and the satisfaction of the District's Engineer.

Sec. 5-10 Oversized Public Sewers: When a person is required by the District to install a sewer more than one pipe size larger than required to serve the persons land, the District may either proceed under the provisions of the section on Main Extensions or may enter into an agreement to pay for the oversizing from funds of the District. The cost of said oversizing to be collected when the lands benefiting from the oversizing are connected to the sewer system.

Sec. 5-11 Main Extension: When a person, in order to serve his land, is required to construct a public sewer through or adjacent to land which for any reason is not entitled to connect to the proposed sewer, said person may receive a refund of the cost of said sewer providing the person enters into a written agreement with the Board. The agreement shall provide that the person will submit plans and specifications and obtain District approval; shall provide any easements required; shall furnish the Board certified copies of the cost of the sewer, including costs of engineering and inspection. The Board will agree that any person connecting to said main extension shall pay all fees, connection, annexation and other charges as required by this ordinance. The Board will agree that a portion of the above charges shall be reimbursed to the person who paid for the main extension or to his assigns. The amount to be paid for each connection shall not exceed an agreed percentage of the installation costs. No interest shall be paid on such refunds and the term of the agreement shall not exceed ten (10) years. The District shall determine the size of the main extension, the location and size of the wyes and such other appurtenants as may be required.

Article 6
Permits and Fees

Sec. 6-1 Permit Required for Connecting with, Opening into, Altering or Disturbing any Public Sewer System: No person shall uncover, make any connections with or opening into, use, alter or disturb any public sewer or appurtenance without first obtaining a written permit from the District

Sec. 6-2 Application for Permit: Any person legally entitled to apply for and receive a permit shall make such application on forms provided by the District for that purpose. He shall give a description of the character of the work proposed to be done and the location, ownership, occupancy and use of the premises in connection therewith. The Manager may require plans, specifications or drawings and such other information as he may deem necessary.

If the Manager determines that the plans, specifications, drawings, descriptions or information furnished by the applicant are in compliance with the Ordinances, rules and regulations of the District, he shall issue the permit applied for upon payment of the required fees as listed in this Ordinance.

Sec. 6-3 Compliance with Permit: After approval of the application, evidenced by the issuance of a permit, no change shall be made in the location of the sewer, the grade, materials, or other details from those described in the permit or as shown on the plans and specifications for which the permit was issued except with written permission from the District, the Manager or other authorized representative.

Sec. 6-4 Application for Permit is an Agreement: The applicant's signature on an application for any permit, shall constitute an agreement to comply with all of the provisions, terms and requirements of this and other ordinances, rules

and regulations of the District, and with the plans and specifications he has filed with his application, if any, together with such corrections or modifications as may be made or permitted by the District, if any. Such agreements shall be binding upon the applicant and may be altered only by the District upon written request for the alteration from the applicant.

Sec. 6-5 Classes of Permits: There shall be classes of permits as follows:

a. Residential or commercial building sewer permit

b. Public sewer construction permit

c. Special permit issued with the approval of the Board

Sec. 6-6 Annexations: An annexation fee shall be paid by the owner or owners of the annexing territory as prescribed elsewhere in this Ordinance.

Sec. 6-7 Connection Charges and Service Charges: All connection charges and service charges shall be paid in the manner and amounts specified elsewhere in this Ordinance.

Sec. 6-8 Inspection Fees: Fees for inspection of building sewer, lateral sewers, public sewers and related facilities including but not limited to pump stations, force mains, preliminary treatment facilities, grease or other interceptors, abandonment of septic tanks, cesspools or drywells shall be as specified in this Ordinance or as determined by the Board.

Sec. 6-9 Faithful Performance Bond: Prior to the issuance of a permit for public sewer construction the applicant shall furnish to the District a faithful performance bond or cash in the amount of one hundred percent (100%) of the estimated cost of the work, said bond to be secured by a surety or sureties satisfactory to the District. The cash deposit or faithful performance bond shall be conditioned upon the performance of the terms and conditions of the permit and shall guarantee the correction of faulty workmanship and the replacement of defective materials for a period of one (1) year after the date of acceptance of the work.

Sec. 6-10 Disposition of Fees: All fees collected on behalf of the District shall be shown as revenue in the proper account and the funds deposited in the manner provided by the District.

Sec. 6-11 All Work to be Inspected: All sewer construction work and building sewers shall be inspected by an Inspector acting for the District to ensure compliance with all requirements of the District. No sewer shall be covered at any point until it has been inspected and passed for acceptance. No sewer shall be connected to the District's public sewer until the work covered by the permit has been completed, inspected and approved by the Inspector. If the test proves satisfactory, the Inspector shall issue a certificate of satisfactory completion.

Sec. 6-12 Written Notice May Be Required: It shall be the duty of the person doing the work authorized by permit to notify the District that said work is ready for inspection. District may require the notice to be given in writing. Such notification shall be given not less than forty-eight (48) hours before the work is to be inspected. It shall be the duty of the person doing the work to

make sure that the work will stand the test required by the District before giving the above notification. When the Inspector finds the work not ready for inspection or when the required test fails, the Manager may require an additional fee prior to reinspection or retest.

Sec. 6-13 Condemned Work: When any work has been inspected and the work condemned and no certification of satisfactory completion given, a written notice to that effect shall be given, instructing the owner of the premises, or the agent of such owner, to repair the sewer or other work authorized by the permit in accordance with the ordinances, rules and regulations of the District.

Sec. 6-14 All Costs Paid by Owner: All costs and expenses incident to the installation and connection of any sewer or other work for which a permit has been issued shall be borne by the owner. The owner shall indemnify the District from any loss or damage that may directly or indirectly be occasioned by the work.

Sec. 6-15 Sewer Service Outside the District: The District will not grant permission to connect any lot or parcel of land outside the boundary of the District except that with the permission of the Board lands belonging to the State of California or to the Federal government may be served under the terms of an agreement and the payment of fees and charges approved by the Board.

Sec. 6-16 Street Excavation Permit Required: A separate permit must be secured from the San Luis Obispo Road Department, the California Department of Transportation, or any other authority having jurisdiction thereover by owners or contractors intending to excavate in public ways for the purpose of installing sewers or making sewer connections.

Sec. 6-17 Liability: The District and its officers, agents and employees shall not be answerable for any liability or injury or death to any person or damage to any property arising during or growing out of the performance of any work by any such applicant. The applicant shall be answerable for, and shall save the District and its officers, agents and employees harmless from any liability imposed by law upon the District or its officers, agents or employees, including all costs, expenses, fees and interest incurred in defending same or in seeking to enforce this provision. Applicant shall be soley liable for any defects in the performance of his work or any failure which may develop therein. Applicant shall obtain property and liability insurance in amounts satisfactory to the District and shall furnish the District with a certificate of said issuance.

Sec. 6-18 Time Limit on Permits: If work under a permit be not commenced within six (6) months from the date of issuance or if after partial completion, the work be discontinued for a period of six (6) months, the permit shall therefore become void and no further work shall be done until a renewal of the permit shall have been secured. A ten (10) percent renewal fee shall be paid upon issuance of said renewed permit. Nothing in this section shall be deemed to extend the thirty (30) day period within which a sewer connection must be made under Article 3 of the Ordinance.

Article 7
Enforcement and Penalties

Sec. 7-1 Liability for Violation of Ordinances, Rules and Regulations: Any person found to be violating any provisions of this or any other ordinance, rule or regulation of the District, may be served by the Manager or other authorized person with written notice stating the nature of the violation and providing a reasonable time limit for the satisfactory correction thereof. All persons shall be held responsible for any and all acts of agents or employees done under the provision of this or any other ordinance, rule or regulation of the District. Upon being notified by the Manager of any defect arising in any sewer or of any violation of this ordinance, the person or persons having charge of said work shall immediately correct the same.

Sec. 7-2 Continued Violation a Public Nuisance: Continued habitation of any building or continued operation of any industrial facility in violation of the provisions of this or any other ordinance, rule or regulation of the District is hereby declared to be a public nuisance. The District may cause proceedings to be brought for the abatement of the occupancy of the building or industrial facility during the period of such violation.

Sec. 7-3 Disconnection for Violation: As an alternative method of enforcing the provisions of this or any other ordinance, rule or regulation of the District, the Manager shall have the power to disconnect the user or subdivision sewer system from the sewer mains of the District. The Manager shall also have the right to discontinue water service to the property where the violation is occurring. Upon disconnection, the Manager shall estimate the cost of disconnection and reconnection to the system, and such user shall deposit the cost as estimated, of disconnection and reconnection before such user is reconnected after payment of all costs of disconnection and reconnection.

Sec. 7-4 Habitation of Disconnected Premises Forbidden: During the period of such disconnection, habitation of such premises by human beings shall constitute a public nuisance, whereupon the District shall cause proceedings to be brought for the abatement of the occupancy of said premises by human beings during the period of such disconnection. In such event, and as a condition of reconnection, there is to be paid to the District a reasonable attorney's fee and cost of suit arising in said action.

Sec. 7-5 Means of Enforcement: The District hereby declares that the foregoing procedures are established as a means of enforcement of the terms and conditions of its ordinances, rules and regulations and not as a penalty.

Sec. 7-6 Violation of Ordinances, Rules and Regulations Is a Misdemeanor: Pursuant to Section 6523 of the Health and Safety Code of the State of California, the violation of any of the provisions of an ordinance, rule or regulation of the District by any person shall be punishable by a fine not to exceed One Thousand Dollars ($1,000.00), imprisonment not to exceed one (1) month, or both. Each and every connection or occupancy in violation of any ordinance, rule and regulation of the District shall be deemed a separate violation and each and every day or part of a day a violation of the ordinance, rule or regulation continues shall be deemed a separate offense hereunder and shall be punishable as such.

Sec. 7-7 Violator Liable for Any Expense Loss or Damage to the District: Any person violating any of the provisions of the ordinances, rules or regulations of the District shall become liable to the District for any expense, loss or damage occasioned by the District by reason of such violation.

Article 8
Inspection, Connection, Annexation, Service and Permit Fees

Sec. 8-1 Items of Charges: This Ordinance fixes the following inspection fees:

Building sewer	$15.00
Wye	20.00
Backflow valve	10.00
Individual pump and force main	15.00
abandoning septic tank	20.00

Sec 8-2 Plan Check and Inspection Fees for New Public Sewers: Before review of plans to connect to a public sewage system, the applicant shall pay a plan checking fee equal to the actual cost of plan check by District's authorized representative, or $35.00, whichever is greater. If applicant makes substantial changes other than those requested by the District, in plans that have been returned by the District, or if he makes more than one resubmittal of corrected plans, an additional checking fee equal to one-half of the basic fee shall be paid to the District. After approval of plans and receipt of bond(s) the applicant shall pay an inspection fee deposit equal to 1½ percent of the Manager's estimated construction costs for the work, which fee shall be adjusted to the actual inspection costs by the District's authorized representative. After approval of the plans and upon receipt of the inspection fee deposit, the Manager shall issue a permit to construct the new sewers. No building shall be connected to the new sewers until a connection charge is paid as hereinafter required. The applicant and the District may enter into a Reimbursement Agreement whereby the District may participate in the costs of oversizing or main extensions.

Sec. 8-3 Connection Fee: The owner of a lot or parcel shall pay a connection fee of $1,000.00 at the time application is made for connection to the sewage system. EXCEPT that where the connection fee is shown as having been paid in connection with Cambria Assessment District No. 1, or other numbered District, no additional connection fee shall be paid unless said lot or parcel is divided subsequent to the formation of the above Assessment District containing the lot or parcel.

Unless the Board by motion prior to July 1 of any year determines that the increase shall not occur, the connection fee shall increase on July 1, 1983, by four percent and increase on July 1 of each succeeding year by four (4) percent except that the amount of the increase shall be rounded to the closest dollar.

Sec. 8-3.1 Tax Dated Real Property: A parcel which was assessed during improvement district proceedings for the collection system, but upon which the assessment was not paid because the parcel was deeded to the State for non-payment of taxes, will incur an additional charge equal to the assessment involved for that parcel.

sec 7-2

Sec 8-3.2 Unassessed Real Property Tax-Deeded to the State: A parcel which was not assessed during improvement district proceedings for the collection system because such parcel had previously been tax-deeded to the State, shall incur an additional charge equal to the assessment which would have been levied upon it had such parcel been assessed in the manner in which parcels of like kind were assessed during said proceedings.

When such parcel is subsequently redeemed, or purchased from the State by operation of law, or otherwise lawfully acquired, the person thus acquiring title thereto may pay said additional charge in full at the time such title is acquired, or as provided in Section 8-3.3.

Sec. 8-3.3 Payment of Charges Made in Lieu of an Assessment: Whenever a charge is made against a lot or parcel under conditions set forth in Section 8-3.1 or Section 8-3.2, the owner thereof, subject to the approval of the Board as set forth in a letter of agreement between the Board and the owner, may elect to pay such charges in five(5) equal annual installments together with such interest at ten (10) percent per annum, penalties, costs, and fees as may be required by law or this ordinance.

Sec. 8-4 Annexation Fee: The owner of a lot, parcel, subdivision or tract which existed within the boundaries of assessment District No. 1 as of August 15, 1972, shall pay an annexation fee, in addition to the Connection Fee, at the time application is made for connection to the sewerage system, or prior to the recording of a final or parcel map or prior to the release of bonds guaranteeing the installation of sewers. The determination of which the above alternatives shall apply shall be made by the Board and be included in a letter of agreement between the Board and the owner. The annexation fee shall be determined by calculating the benefit units on the lots, parcel or parcels using the same method used to determine the benefit units in Cambria Assessment District No. 1, and multiplying the benefit units by the dollar value of a benefit unit as determined for the above Assessment District. The value of one benefit unit in Cambria Assessment District No. 1 is $711.00.

Sec. 8-5 Annexation Fee for Additional Assessment Districts: It is the intent of this section to insure that the benefit unit value in subsequent assessment districts shall not be less than $1,173.00. Subsequent assessment districts will be required to repay their share of the cost of oversizing of sewer mains and oversizing the treatment plant or may be required to fund the cost of additional treatment facilities or contribute to the Capital Improvement Account.

The annexation fee as stated above was computed for and as of date of April 1, 1982. Annual adjustments increasing the annexation fee will be made as of July 1 of each subsequent year applying the California Consumer Price Index (CCPI), corrected to San Luis Obispo County, to the fixed asset value of $13,917,002 determined for June 31, 1981. The CCPI index for 1981/1982 is 1.0912.

Sec. 8-6 Determination of Benefit Units: All property shall have the benefit units and assessment determined in accordance with the following:

(a) Any property 2,000 square feet in area, or less = 1 benefit unit.

(b) Any Property 2,001 square feet to 5,000 square feet in area =1.2 benefit units.

(c) Any property over 5,000 square feet in area will be assessed 0.1 benefit units for each additional 1,000 square feet of area in addition to the basic benefit unit charge - 1.2 benefit units + 0.1 (No. of Ft^2/1,000 ft^2) benefit units.

(d) Property will be assessed only to a depth of 200 feet.

A lateral will be furnished at no cost to the served property through which there is a sewer easement, provided, however, that such laterals will be constructed within the easement and will not be constructed beyond the easement boundary.

(e) A connection fee of $1,000.00 will be assessed to each property being served by the collection system and the treatment plant. The connection fee is based on a four inch lateral installed according to District requirements at owners expense.

(f) Property will be assessed only to a depth of 200 feet.

(g) Zero benefit units will be assigned to any lot or parcel in the assessment district that is not benefited by the collection system.

(h) The Engineer will determine how corner properties and properties which are exceptions will be assessed to most equitably serve both the property and the assessment district.

Sec. 8-7 Sewer Service Charge: A monthly sewer service charge will be payable after the premises are connected to the sewerage system.

The monthly rate for each residence, duplex, apartment, mobile home, or single family residential unit shall be . . . . . $ 9.40

Motel Rooms without Kitchens	3.75
Motel Rooms with Kitchen	9.40
Restaurants (Each 10 Seats or Fraction)	7.50
Bars (Each 10 Seats or Fraction)	3.50
Schools (per Student)	.90
Churches & Meeting Halls	5.00
Churches & Meeting Halls with Kitchen	15.00
Service Stations	25.00
Barber Shops	5.00
Beauty Shops	15.00
Laundromat	130.55
Clinic	40.00
Dentist	10.00
Office (Less than 10 Employees)	5.00
Trailer Parks	9.40
Cleaners	25.00
Markets	10.00
Banks (Less than 10 Employees)	5.00
Retail (Less than 10 Employees)	5.00
Theatre (Less than 100 Seats)	15.50
County Park	47.65

The Minimum monthly rate for commercial enterprises will be $5.00.

Business, factories, industries or other establishments adding industrial wastes or unusual quantities of water to the sewerage system or establishments not listed above will be charges a rate established by contract between the user and the District.

Sec. 8-8 Sewer Service Charge to Unoccupied Property: After a property has been connected to a sewer system, sewer service charges shall continue to accure whether the property is occupied or not, unless the improvements thereon are removed or destroyed.

Sec. 8-9 Sanitation Funds: Money received from permits, inspection, plan check, connection, annexation or other fees and from sewer service charges shall be deposited in the fund accounts as hereinafter designated and the expenditures from the funds shall be in accordance with the uses permitted.

Sec. 8-10 Operating Account: This account shall receive all monies from permits, inspection, plan check fees, sewer service charges, penalties and miscellaneous revenue including gifts and grants to the District for purposes detailed below.

The monies so received shall be used for operation, maintenance, and repairs to the wastewater facility including the collection system and water quality control plant. Also included are supplies, tools, spare parts, chemicals, salaries, laboratory equipment and supplies, training of personnel, dues to organizations related to liquid waste disposal and cost of attending conferences and a reasonable amount for general and administration expenses.

Expenditures from this Operating Account shall not be used for capital purposes.

Expenditures from the Operating Account shall be based on an annual budget prepared by the Manager and approved by the Board. The Budget shall contain sufficient detail to enable proper control of the operating funds. The budget will contain a reasonable sum for contingencies.

All income from the source listed above which is in addition to the amount budgeted shall be placed in the Capital Improvement Account.

Sec. 8-11 Capital Improvement Account: This account shall receive all monies from connection and annexation fees, interest on capital funds, gifts and grants to the District for capital improvements, surplus revenue from the operating account as determined above.

The monies so received shall be used only for capital improvements such as enlarging the water quality control plant, installing larger pump stations, installing new or larger sewer pipes, force mains or related facilities, repayment to the District of funds advanced from water revenue, to repay loans or advances from any source borrowed to finance capital improvements or for placing in a special fund to be used to guarantee the repayment of principal and interest on bonds issued pursuant to any improvement act proceedings, purchase of land for plant enlargement or for water reclamation processes, to pay for engineering, administration, legal or other costs related to any capital improvements of the wastewater facilities.

Funds in the Capital Improvement account shall be deposited in interest bearing accounts in a manner approved by the Board. Expenditures from this account shall be based on a budget or on an engineer's estimate which has been approved by the Board.

Nothing in this section shall prevent the Board from authorizing expenditure of Capital Improvement Fund to repair damage caused by a catastrophic event where the health of the community is endangered and when other funds are not available.

Sec. 8-12 Division of Land and Bond: To ensure proper planning, administrative, and fiscal controls over use of public sewers and orderly community development, if any lot or parcels of land upon which there is an unpaid assessment is

proposed to be divided, either by means of lot split provisions or the Subdivision Map Act, the owner of the lot or parcel shall make application in writing to the District, indicating the proposed division by a map or sketch.

Upon submittal of the application to the District, the owner will initiate action at the County Tax Collector's Office to have the lot or parcel separately valued for tax and assessment purposes.

Upon submittal of the application, the District will inform the owner of any requirements to be met in fulfilling the provisions of District ordinances, rules, and regulations with respect to the installation of new on-site water or sewer lines, fire hydrants, safety devices, and the like, or improvement to such existing on-site facilities. The cost of such installation or improvement to be borne by the owner; and the District will inform the owner that the County Planning Director will require the owner to submit, with his preliminary map, a letter from the District setting forth the availability of water and sewer facilities required for the proposed lot split or subdivision, which letter the District will furnish upon request of the owner and his agreement to fulfill the requirements of the aforesaid ordinances, rules and regulations.

Article 9
Bills, Delinquencies and Collections

Sec. 9-1 Rendering of Sewer Bills: The sewer service charge and other charges shall be sent to the owner of the property, except that where the owner of the property has made arrangements with the Manager by letter or on forms provided to have the bills sent to the occupant of the property or to the owner's agent. However, in case of nonpayment of bills, the property owner shall be liable for the payment of the bills and any penalties. Sewer bills sent with the water bill, shall be itemized separately, and shall cover the same period of time as the water bill.

Sec. 9-2 Commencement of Service Charge: The Service Charge shall accrue beginning on the first day of the month following the connection to the sewer system or following the beginning of water service, which ever is later.

Existing improved property in an assessment district shall accrue a Sewer Service Charge on the first of the month following connection to the sewer system.

Sec. 9-3 Interest and Penalties on Delinquent Bills: On the 10th day of the month, following the month in which a sewer bill is mailed, the bill shall become delinquent if the bill, or that portion thereof which is not in bona fide dispute, remains unpaid. A delinquent bill shall be increased by a penalty of 10 percent of the amount of the delinquency and an additional ten (10) percent charge will be added to cover administrative costs. After a bill has become delinquent, the Manager shall forthwith by United States mail notify the owner of the property of the delinquency, if the owner has requested the bills to be sent to the occupant. If a bill has been delinquent for two months on property previously served by a public sewer, the Manager shall post notice on the property that sewer service will be discontinued unless the bills for sewer charges plus all delinquencies, administrative charges, and penalties are paid and that after service is discontinued, the property may not be occupied or used by human beings or any wastewater produced thereon. If the occupant is not the property owner, the Manager shall also send a copy of the disconnection notice to the property owner by mail at his last address shown on the Manager's records.

Sec. 9-4 Discontinuance of Sewer Service: If all the delinquent bills, administrative charges and penalties have not been paid to the required amount within fifteen (15) days after the posting of the notice of disconnection, the Manager shall disconnect the sewer where such property has been previously served by a sewer, or the Manager may discontinue water service to the property, and shall post on the property a notice that the property shall not be occupied or used by human beings or any wastewater produced thereon until the sewer is reconnected. The cost of disconnecting the sewer and reconnecting it, together with all other amounts due, must be paid in cash or cashier's check or certified check at the time application is made for reconnection. It shall be unlawful for any person to inhabit a disconnected property or produce any wastewater thereon until the property has been reconnected. Service charges shall continue to accrue during the period of such disconnection.

Sec. 9-5 Termination of Service Upon Abandonment: In the event all structures in which wastewater is produced are removed from a property served by the sewer system, or in the further event that all structures in which wastewater may be produced are permanently abandoned and are not used, the Manager may terminate service to the property if the Manager deems such abandonment to be permanent. Services charges shall thereupon be suspended. The Manager shall, if he deems it necessary to protect the wastewater system, physically plug the lateral sewer at its connection to the building sewer and the cost of plugging and reconnecting shall be paid prior to restoring service to the property. Thereafter, the property shall not be occupied by humans nor shall any wastewater be produced thereon until service has been restored as herein provided. If the property is occupied by human beings or any wastewater is produced thereon before the service has been restored, the Manager shall have authority to disconnect the property without further notice.

Sec. 9-6 Delinquent Charges to Become a Lien: Charges of any kind more than sixty (60) days delinquent plus penalties and interest thereon when recorded as provided in Article 4, Chapter 6 of Part 3 of Division 5, Health and Safety Code of California, whall constitute a lien upon the real property served, except that no such lien shall be created against any publicly owned property. Such lien shall continue until the charge, penalties, and interest thereon are fully paid, or until the property is sold therefore, or until otherwise extinguished by operation of law.

In the event that a lien is filed, or any action at law is commenced for the collection of such delinquent charge, the District shall compute the amount of the charge plus penalties, disconnection fees, and interest on the sum thereof at the rate of one-half of one percent per month from the date of delinquency, and shall report the total of such computation to the County Auditor for inclusion on the tax rolls. A copy of such report shall be recorded with the County Recorder.

Sec. 9-7 Prepayment of Delinquent and Other Charge Prior to Re-Connection: After a building sewer has been disconnected from the sewer system, it shall not be reconnected until all delinquent charges plus penalties, all charges which have accrued since the time of disconnection, and the estimated cost of reconnection have been paid and any required guarantee for the payment of bills has been made, except as otherwise provided herein. All amounts required to be paid shall be paid before the building sewer is reconnected to the sewer system.

Sec. 9-8 Addition of Unpaid Fees and Charges to the Tax Roll: On or before July 15th of each calendar year, the General Manager shall prepare a list of persons

owing connection fees, service charges, penalties and other charges. The Manager, immediately upon preparing such a list, shall follow procedures for notice and hearing set forth in Article 4 of Chapter 6 of Part 3 of Division 5 of the Health Safety Code of the Sate of California and upon the completion of same, a delinquent list shall be transmitted before August 10th of such year to the County Auditor for addition to the assessment roll as provided for in said Article 4 of Chapter 6 of Part 3 of Division 5 of the Health and Safety Code of the State of California.

Effective Date: This Ordinance shall become effective immediately upon its adoption and shall supercede any and all rules and regulations heretofore promulgated and shall remain in effect until repealed or amended.

The foregoing Ordinance was adopted at a regular meeting of the Board of Directors of the Cambria Community Services District held on October 18, 1982

On the motion of Director Brown , second Director May and the following roll call vote, to wit: -

AYES: Directors Brown, Warren, Loomis, May and Pitkin

NOES: 0

ABSENT: 0

Ordinance No. S-82 is hereby adopted.

Richard A. Pitkin
President, Board of Directors

ATTEST:

Barbara Campo
Secretary, Board of Directors

Approved as to Form and Legality

Allen Grimes, District Counsel

Appendix E

Change Log

SSMP Change Log
Cambria Community Service District

Date	SSMP Element	Description of Change/Revision Made	Change Authorized By:
May 2023	2.1	Revised Employee log	J. Allchin
May 2023	2.3	Changed contact list	J. Allchin
May 2023	4.2.1	Enhanced Maintenance Areas	J. Allchin
May 2023	4.2.2	% of line cleaned each year	J. Allchin
May 2023	4.2.3	% of line cleaned each year	J. Allchin
May 2023	4.3	Cambria CSD now cameras the system in-house. At this time, we are no longer contracting this service.	J. Allchin
May 2023	4.5.1	Additional equipment added	J. Allchin
May 2023	4.5.2	Added Raush camera and Dymond maps	J. Allchin
May 2023	6.1	Added descriptive text on new OERP	J. Allchin
May 2023	6.2	OERP spill category change and addition of category four spill reporting requirements.	J. Allchin
May 2023	6.4	Spill from privatly owned facilites added	J. Allchin
May 2023	8.2.1	Updated schedule of CIP projects	J. Allchin
May 2023	9.1	% of line cleaned annually	J. Allchin
May 2023	10.2	Category 4 spill added	J. Allchin
May 2023		Appendix order change I-IX	J. Allchin

Appendix F

Trunk Sewer Connection Standards

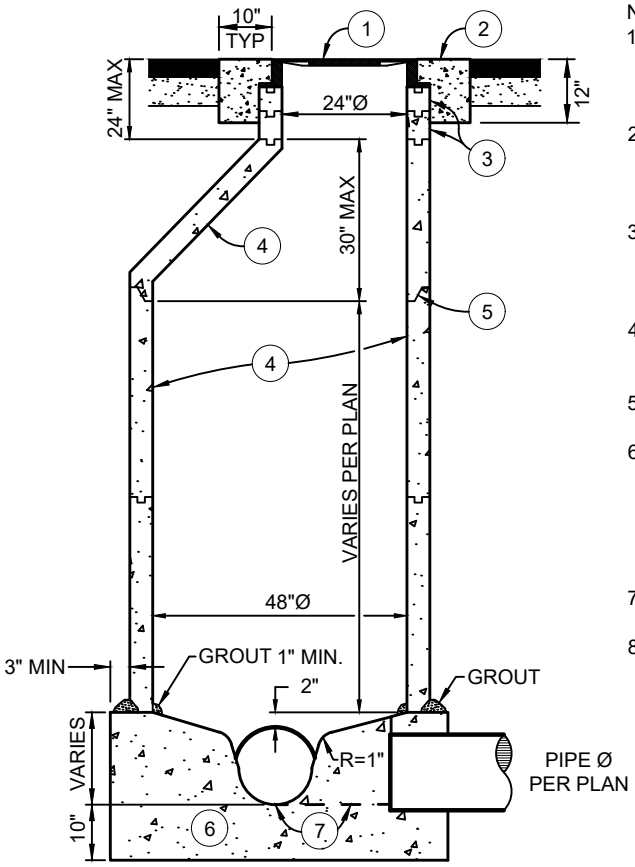

SECTION A-A

NOTES:

1. MANHOLE COVER AND FRAME SHALL HAVE A MINIMUM 24-INCHES DIAMETER OPENING AND CONFORM TO HS-20 TRAFFIC LOADING. LID SHALL HAVE A BLIND PICKHOLE, WATERTIGHT GASKET, AND BE LETTERED "SANITARY SEWER".
2. CONCRETE COLLAR SHALL CONFORM TO STATE STANDARD SPECIFICATIONS, 565 LBS/CY CEMENTITIOUS MATERIAL [6 SACK], TROWELLED TO STREET GRADE, AND ALLOWED TO CURE 48 HOURS PRIOR TO FULL TRAFFIC USE.
3. PROVIDE 3-INCHES OR 6-INCHES (9-INCHES MAX) ADJUSTING RINGS AS NEEDED, GROUTED ON THE INSIDE. PROVIDE HYDRAULIC CEMENT GROUT BETWEEN MANHOLE FRAME AND TOP RING SHALL BE PER APPENDIX C3.
4. PRECAST SHAFT(S) AND ECCENTRIC CONE SHALL MEET ASTM C-478 61T FOR CLASS 2 REINFORCED CONCRETE PIPE, OR AS APPROVED BY THE DEPARTMENT.
5. JOINTS SHALL BE WATERTIGHT, SET WITH BUTYL RUBBER SEALANT (RUB'R-NEK OR EQUAL).
6. CONCRETE MANHOLE BASE SHALL CONFORM TO STATE STANDARD SPECIFICATIONS, 565 LBS/CY CEMENTITIOUS MATERIAL [6 SACK], AND REST UPON UNDISTURBED MATERIAL. BOTTOM SHAFT SHALL BE WET-SET OR SET IN FORMED GROOVE. PRECAST BASES MAY BE USED WITH PRIOR APPROVAL OF THE DEPARTMENT AND SHALL MEET ASTM C-478 61T.
7. CONCRETE CHANNEL SHALL BE STEEL TROWEL FINISH AND SHELF AREAS SHALL BE MONOLITHICALLY PLACED.
8. UNDER NO CIRCUMSTANCES SHALL UTILITY LIDS AND CONCRETE COLLARS BE LOCATED WITHIN CURBS, GUTTERS, SIDEWALKS, DRIVEWAY APRONS, CURB RAMPS, OR CROSS GUTTERS.

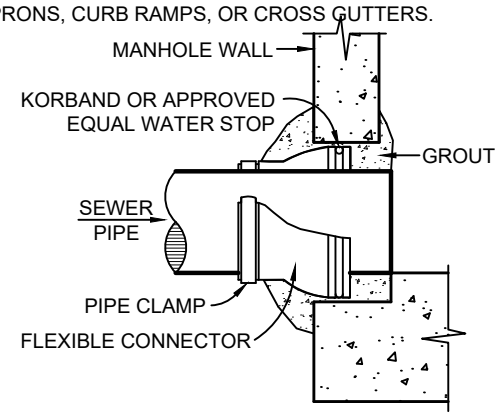

TYPICAL CONNECTION DETAIL

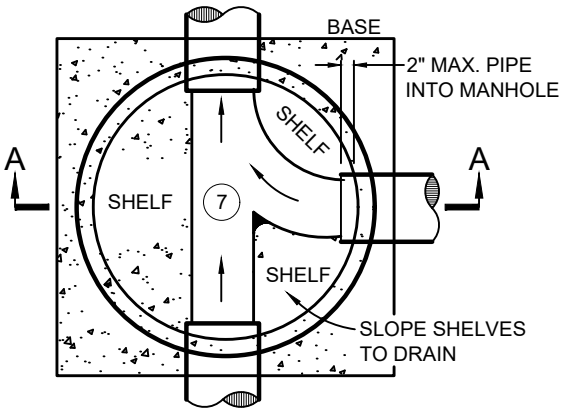

PLAN VIEW

PINKERTON A-640 WITH SKID RESISTANT SURFACE, BLIND PICKHOLE, WATER TIGHT GASKET, AND HS-20 TRAFFIC LOADING, OR APPROVED EQUAL, MARKED "SANITARY SEWER"

LID DETAIL

DEPARTMENT OF PUBLIC WORKS - STANDARD DRAWINGS

SANITARY SEWER MANHOLE

Issued: August 2022	Scale: NTS
Revised:	Revision No:
Drawing No: S-1	

NOTES:

1. MANHOLE COVER AND FRAME SHALL HAVE A MINIMUM 24-INCHES DIAMETER OPENING AND CONFORM TO HS-20 TRAFFIC LOADING. LID SHALL HAVE A BLIND PICKHOLE, WATERTIGHT GASKET, AND BE LETTERED "SANITARY SEWER".
2. CONCRETE COLLAR SHALL CONFORM TO STATE STANDARD SPECIFICATIONS, 565 LBS/CY CEMENTITIOUS MATERIAL [6 SACK], TROWELLED TO STREET GRADE, AND ALLOWED TO CURE 48 HOURS PRIOR TO FULL TRAFFIC USE.
3. PROVIDE 3-INCHES OR 6-INCHES (9-INCHES MAX) ADJUSTING RINGS AS NEEDED, GROUTED ON THE INSIDE. PROVIDE HYDRAULIC CEMENT GROUT BETWEEN MANHOLE FRAME AND TOP RING SHALL BE PER APPENDIX C3.
4. PRECAST SHAFT(S) AND ECCENTRIC CONE SHALL MEET ASTM C-478 61T FOR CLASS 2 REINFORCED CONCRETE PIPE, OR AS APPROVED BY THE DEPARTMENT.
5. JOINTS SHALL BE WATERTIGHT, SET WITH BUTYL RUBBER SEALANT (RUB'R-NEK OR EQUAL).
6. CONCRETE MANHOLE BASE SHALL CONFORM TO STATE STANDARD SPECIFICATIONS, 565 LBS/CY CEMENTITIOUS MATERIAL [6 SACK], AND REST UPON UNDISTURBED MATERIAL. BOTTOM SHAFT SHALL BE WET-SET OR SET IN FORMED GROOVE. PRECAST BASES MAY BE USED WITH PRIOR APPROVAL OF THE DEPARTMENT AND SHALL MEET ASTM C-478 61T.
7. CONCRETE CHANNEL SHALL BE STEEL TROWEL FINISH AND SHELF AREAS SHALL BE MONOLITHICALLY PLACED.
8. LATERAL CONNECTION OVER 5-FEET TO BE P.V.C. FOR DROP TEE, PIPE, AND 90-DEGREE BEND.
9. INSTALL REMOVABLE PLUG.
10. SEWER CLEANOUT BOX PER STANDARD DRAWING S-2.
11. UNDER NO CIRCUMSTANCES SHALL UTILITY LIDS AND CONCRETE COLLARS BE LOCATED WITHIN CURBS, GUTTERS, SIDEWALKS, DRIVEWAY APRONS, CURB RAMPS, OR CROSS GUTTERS.

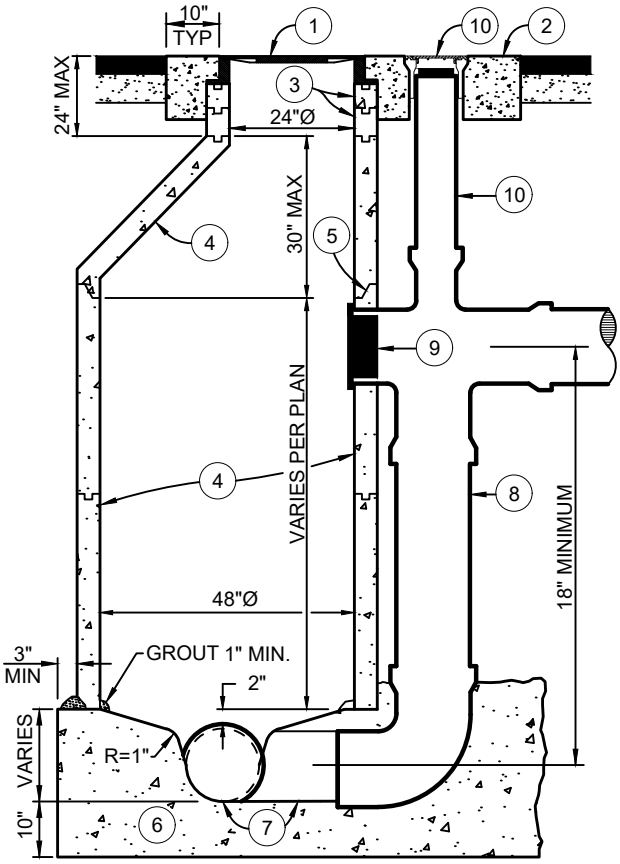

SECTION A-A

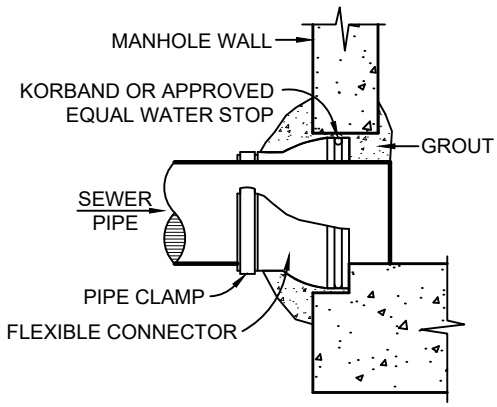

TYPICAL CONNECTION DETAIL

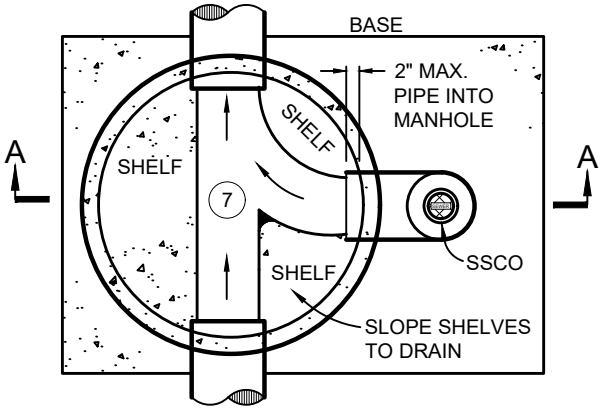

PLAN VIEW

PINKERTON A-640 WITH SKID RESISTANT SURFACE, BLIND PICKHOLE, WATER TIGHT GASKET, AND HS-20 TRAFFIC LOADING, OR APPROVED EQUAL, MARKED "SANITARY SEWER"

LID DETAIL

DEPARTMENT OF PUBLIC WORKS - STANDARD DRAWINGS

SANITARY SEWER
DROP MANHOLE

Issued:	Scale:
August 2022	NTS
Revised:	Revision No:
Drawing No:	S-1a

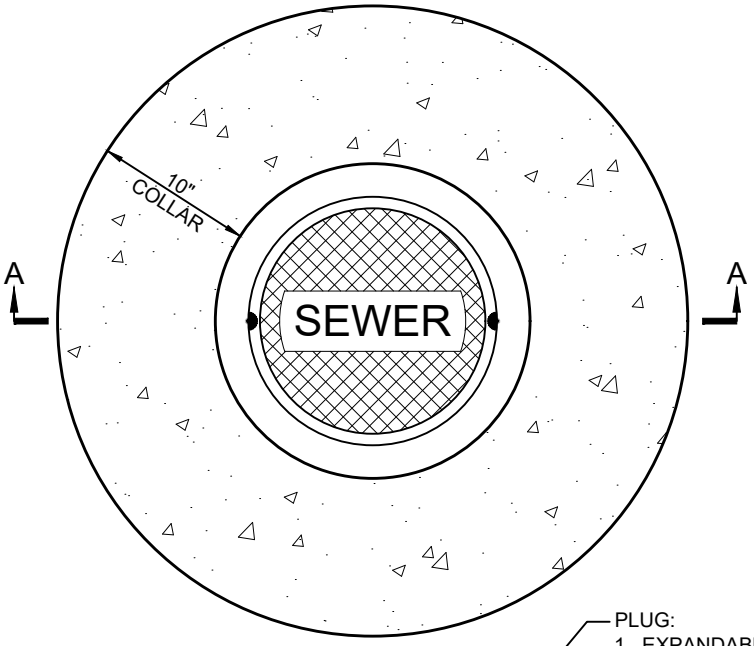

PLAN

PLUG:
1. EXPANDABLE O-RING PLUG FOR 6"Ø PIPE BELL WITH CAP, OR
2. PLAIN END WITH COOKIE AND BAND SEAL FOR 8"Ø OR LARGER PIPES

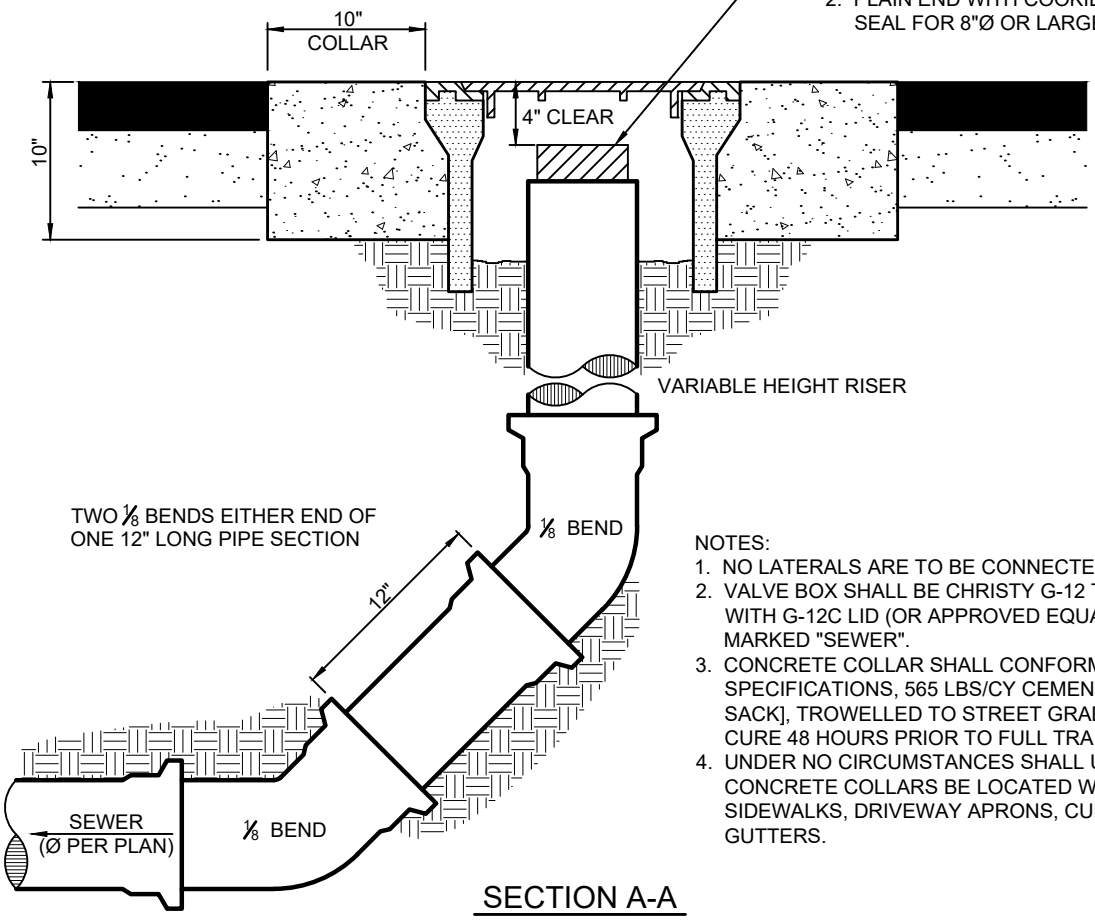

SECTION A-A

NOTES:
1. NO LATERALS ARE TO BE CONNECTED TO CLEANOUTS.
2. VALVE BOX SHALL BE CHRISTY G-12 TRAFFIC VALVE BOX WITH G-12C LID (OR APPROVED EQUAL). COVER SHALL BE MARKED "SEWER".
3. CONCRETE COLLAR SHALL CONFORM TO STATE STANDARD SPECIFICATIONS, 565 LBS/CY CEMENTITIOUS MATERIAL [6 SACK], TROWELLED TO STREET GRADE, AND ALLOWED TO CURE 48 HOURS PRIOR TO FULL TRAFFIC USE.
4. UNDER NO CIRCUMSTANCES SHALL UTILITY LIDS AND CONCRETE COLLARS BE LOCATED WITHIN CURBS, GUTTERS, SIDEWALKS, DRIVEWAY APRONS, CURB RAMPS, OR CROSS GUTTERS.

DEPARTMENT OF PUBLIC WORKS - STANDARD DRAWINGS

SANITARY SEWER
MAIN CLEANOUT

Issued: August 2022	Scale: NTS
Revised:	Revision No:
Drawing No: S-2	

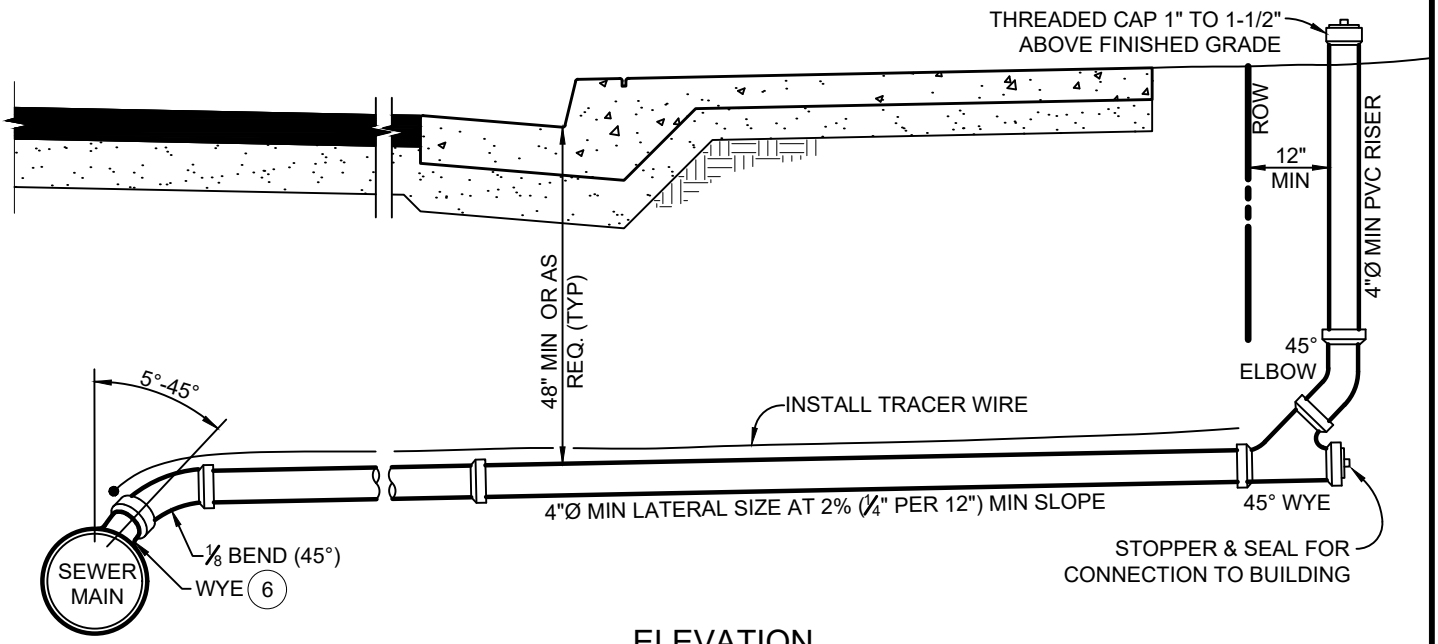

ELEVATION

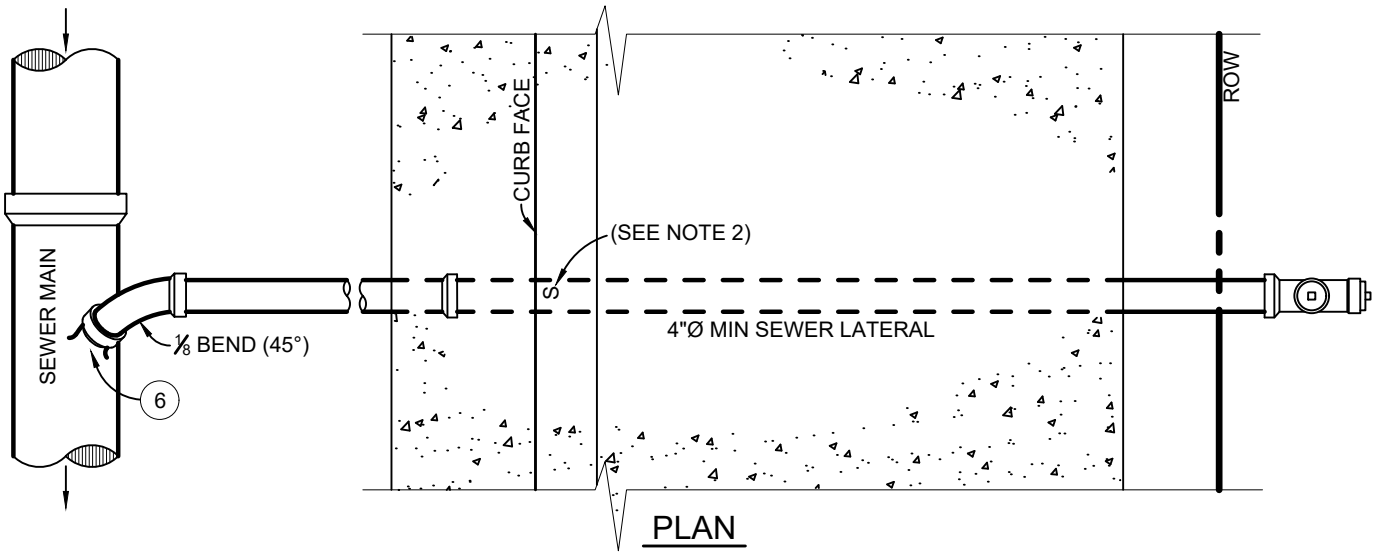

PLAN

NOTES:

1. SEWER LATERAL SHALL BE 4-INCH DIAMETER PVC PIPE AND SHALL MEET ASTM STANDARD D 3034, SDR 35.
2. AN "S" SHALL BE STAMPED OR CHISELED ON THE CURB OVER THE SEWER LATERAL WHEN CURB AND GUTTER IS EITHER CONSTRUCTED OR EXISTING. THE "S" SHALL BE A MINIMUM OF 3" HIGH x 2" WIDE x 3/16" DEEP.
3. MAINTAIN A 5-FEET MINIMUM SEPARATION BETWEEN WATER AND SEWER SERVICE LATERALS.
4. SEWER LATERALS SHALL NOT BE LOCATED UNDER DRIVEWAYS.
5. SADDLE CONNECTIONS ARE NOT PERMITTED ON NEW SEWER MAINS.
6. FACTORY-FABRICATED WYE IN SEWER MAIN WITH 1/8 (45-DEGREE) BEND. BEND SHALL POINT DOWNSTREAM AND ENTER MAIN AT A VERTICAL ANGLE OF NOT LESS THAN 5-DEGREES OR MORE THAN 45-DEGREES. FOR SEWER LATERALS CONNECTING ONTO EXISTING SEWER MAIN A SADDLE TEE-BRANCH MAYBE USED IF APPROVED BY THE DEPARTMENT.
7. UNDER NO CIRCUMSTANCES SHALL UTILITY LIDS AND CONCRETE COLLARS BE LOCATED WITHIN CURBS, GUTTERS, SIDEWALKS, DRIVEWAY APRONS, CURB RAMPS, OR CROSS GUTTERS.

DEPARTMENT OF PUBLIC WORKS - STANDARD DRAWINGS

SANITARY SEWER
SERVICE LATERAL

Issued:	Scale:
August 2022	NTS
Revised:	Revision No:
Drawing No:	S-3

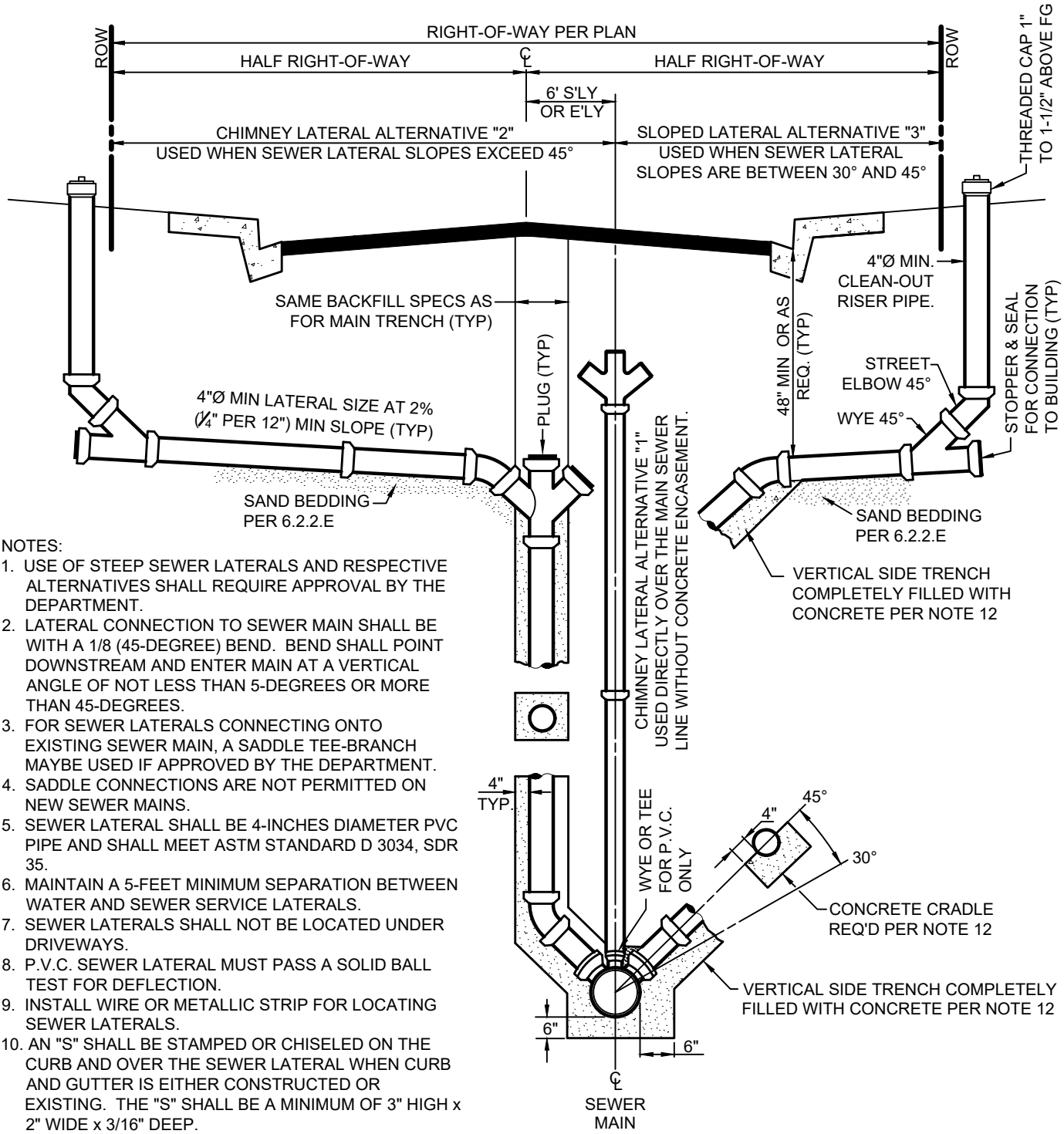

NOTES:

1. USE OF STEEP SEWER LATERALS AND RESPECTIVE ALTERNATIVES SHALL REQUIRE APPROVAL BY THE DEPARTMENT.
2. LATERAL CONNECTION TO SEWER MAIN SHALL BE WITH A 1/8 (45-DEGREE) BEND. BEND SHALL POINT DOWNSTREAM AND ENTER MAIN AT A VERTICAL ANGLE OF NOT LESS THAN 5-DEGREES OR MORE THAN 45-DEGREES.
3. FOR SEWER LATERALS CONNECTING ONTO EXISTING SEWER MAIN, A SADDLE TEE-BRANCH MAYBE USED IF APPROVED BY THE DEPARTMENT.
4. SADDLE CONNECTIONS ARE NOT PERMITTED ON NEW SEWER MAINS.
5. SEWER LATERAL SHALL BE 4-INCHES DIAMETER PVC PIPE AND SHALL MEET ASTM STANDARD D 3034, SDR 35.
6. MAINTAIN A 5-FEET MINIMUM SEPARATION BETWEEN WATER AND SEWER SERVICE LATERALS.
7. SEWER LATERALS SHALL NOT BE LOCATED UNDER DRIVEWAYS.
8. P.V.C. SEWER LATERAL MUST PASS A SOLID BALL TEST FOR DEFLECTION.
9. INSTALL WIRE OR METALLIC STRIP FOR LOCATING SEWER LATERALS.
10. AN "S" SHALL BE STAMPED OR CHISELED ON THE CURB AND OVER THE SEWER LATERAL WHEN CURB AND GUTTER IS EITHER CONSTRUCTED OR EXISTING. THE "S" SHALL BE A MINIMUM OF 3" HIGH x 2" WIDE x 3/16" DEEP.
11. UNDER NO CIRCUMSTANCES SHALL UTILITY LIDS AND CONCRETE COLLARS BE LOCATED WITHIN CURBS, GUTTERS, SIDEWALKS, DRIVEWAY APRONS, CURB RAMPS, OR CROSS GUTTERS.
12. CONCRETE THRUST BLOCKS SHALL CONFORM TO STATE STANDARD 90-1.01, 470 LBS/CY CEMENTITIOUS MATERIAL [5 SACK].

DEPARTMENT OF PUBLIC WORKS - STANDARD DRAWINGS

SANITARY SEWER
SERVICE LATERAL FOR DEEP MAINS

Issued: August 2022	Scale: NTS
Revised:	Revision No:
Drawing No: S-3a	

Appendix G

SSO Reporting Packet

SANITARY SEWER SPILL

WDR REPORTING PACKET

PREPARED BY APT WATER SERVICES, LLC
UPDATED APRIL 2023 TONI ARTHO

THIS PACKET CONTAINS:

1. RESPONSE TO SPILL, CHECKLIST AND CONTACT LIST
2. COLLECTION SYSTEM EVENT CALLOUT DATA SHEET
3. SPILL CATEGORY DEFINITIONS GUIDE
4. NOTIFICATION, REPORTING, MONITORING, & RECORD KEEPING REQUIREMENTS
5. FLOW ESTIMATION GUIDE
6. SANITARY SEWER SPILL SOP
7. SPILL FACTS AND GUIDELINES

1. RESPONSE TO SANITARY SEWER OVERFLOW (SSO) CHECKLIST

☐ **Contact Utilities Manager/Chief Plant Operator/General Manager to notify of Spill.**

CONTACT	TITLE	PHONE NUMBER
Jim Green	Utilities Manager	Office: 805-927-6119 Cell: 805-550-3558
Toni Artho	Chief Plant Operator	Office: 805-927-6251 Cell: 805-801-3933
Matthew McElhenie	General Manager	Office: 805-927-6230 Cell: 805-503-0466

☐ **Call to dispatch equipment. If working with a contractor, verify contractors are providing assistance. REMEMBER CONTAINMENT IS THE KEY!**

☐ **Warm up truck and equipment. Take the following: CAMERA, GPS, AND REPORTING PACKET.**

☐ **Dispatch to overflow site safely and set up traffic control.**

☐ **Remove blockage and restore flow. Determine blockage cause.**

Notify the following authorities within 2 HOURS of becoming aware of overflow:

CONTACT	TITLE	PHONE NUMBER
Cal OES Warning Center	**Required of sewage spills of 1,000 gallons or more.** **Record Service Control Number in Reporting Packet**	800-852-7550, or 916-845-8911
California Regional Water Quality Control Board	James Bishop – regulatory representative for compliance and notifications James.Bishop@Waterboards.ca.gov	Office: 805-549-3892 Cell: (805) 542-4628

☐ **Clean up any contained portion. Determine the amount of the spill using the picture guide. Determine the amount recovered by how much is in the VacCon tank.**

☐ **If spill reached storm drain or receiving water location, sample for Ammonia and one or more of following: Total Coliform Bacteria, Fecal Coliform Bacteria, E-coli, Enterococcus. Samples should be taken downstream of the point of discharge DCS-001, Point where sewage initially enters receiving water RSW-001, and point upstream of discharge RSW-001U. If the receiving water has no flow during the duration of the spill Enrollee must report "No sampling due to no flow" for receiving water sampling location.**

- ☐ **Fill out the Collection System Event Callout Data Sheet completely. All blanks must be filled in, including the GPS location. Reports need to be sent to all agencies within 24 hours. Give report to supervisor.**
- ☐ **Fill out Spill Report on CIWQS**

KEY CONTACTS

CONTACT	TITLE	PHONE NUMBER
CAMBRIA COMMUNITY SERVICES DISTRICT 24/7 EMERGENCY CALLS:		**805-927-6223**
Matthew McElhenie	General Manager	Office: 805-927-6230 Cell: 805-503-0466 mmcelhenie@cambriacsd.org
John Allchin	Wastewater Department Supervisor/ Chief Plant Operator	Office: 805-927-6251 Cell: 805-550-8428 jallchin@cambriacsd.org
Jim Green	Utilities Manager	Office: 805-927-6119 ext. 119 Cell: 805-550-3558 jgreen@cambriacsd.org
Toni Artho	WW III Operator	Office: 805-927-6250 Cell: 805-801-3933 tartho@cambriacsd.org
Delon Blackburn	WW II Operator	Office: 805-927-6250 Cell: 805-703-3309
Tim O'Marr	WW II Operator	Office: 805-927-6250 Cell: 805-458-1353
Art Garney	WW Collection System Worker	Office: 805-927-6250 Cell: 805-801-8250
Emergency Contractors		
G.F. Garcia & sons Alec Garcia Beau Garcia	Emergency Contractor – sewer and force main repairs	805-995-3548 Office 805-441-1860 Alec Garcia Cell 805-423-8210 Beau Garcia cell

Hartzell Construction	Emergency Contractor – sewer and force main repairs	805-610-8113
FRM	Emergency Contractor – Lift Station Repairs, contracted vacuum removal (Vactor) of sewer obstructions	805-441-5318
Alpha Electrical Service: Kevin Piper	Emergency Contractor - power supply and electrical controls	Cell: 805-235-4728
Tough Automation Andy Thompson	Lift Station Controls, SCADA, and programmable logic controller (PLC) updating and troubleshooting	Cell: 805-400-9015
Al's Septic Pumping Service	Emergency Contractor Sewer line pumping/SSO cleanup responses	805-528-0432
North Coast Tree Services	Placement & filling of sandbags, tree & brush removal	805-927-8525
Professional Pipe Services (aka Pro Pipe)	Sewer Cleaning, Trenchless Repair, and CCTV Inspection Contractor	909-598-9743 800-784-7473
TRAFFIC CONTROL		
Associated Traffic Safety	Flagging & signage	805-461-1600
Traffic Management Inc.	Traffic control plans, permitting	805-585-4986
EROSION CONTROL & SITE RESTORATION SUPPLIES		
Pacific Soil Stabilization	erosion control supplies, biodegradable swaddles, de-chlorination tablets, etc.	(805) 925-7737
S & S Seed	Native grass mixes for hydro-seeding & related restoration applications	(805) 684-0436
Dorman Hydroseeding	hydroseeding	(805) 466-2555

ENVIRONMENTAL MONITORING

Cindy Cleveland Biological Services	Biological monitoring services	Cindy - 805-234-3759 Paul- 805-748-3371
Kevin Merk Associates	Biological monitoring services	805-748-5837
Fruit Growers Lab	Testing	805-783-2940
REGULATORY AGENCIES (Potential impacts on surface water, groundwater, fish or wild animals)		
Cal OES Warning Center	**Required of sewage spills of 1,000 gallons or more. (Notification required within 2 hours for any Class I SSO that is uncontained and enters a waterway, storm drain or ocean.)**	800-852-7550, or 916-845-8911
Central Coast Regional Water Quality Control Board	James Bishop – regulatory representative for compliance and notifications James.Bishop@Waterboards.ca.gov	Office: 805-549-3892 Cell: (805) 542-4628
Division of Drinking Water (District 6)	Jeff Densmore	805-566-1326
Monterey Bay National Marine Sanctuary	**SSOs that could impact the ocean** **Keegan Angerer, Karen Grimer, Bridget Hoover**	24-hour emergency line 831-236 6797
California Department of Fish and Wildlife - Central Region (Region 4)	Julie Vance	559-243-4005 ex 151
U.S. Fish & Wildlife Service	Stephen P. Henry	805-644-1766
National Marine Fisheries	Dan Lawson	206-526-4740
California Coastal Commission	Dan Carl	831-427-4863
California State Parks Hilltop Dispatch	Any Beach affected areas	805-927-2068 805-927-2171 805-927-2069
County Environmental Health Sheriff's Administration	Spill line If after hours or on land	805-781-5544 Fax: 805-781-4211 805-781-4550
NEWS AGENCIES		
Cambrian Newspaper	Kathe Tanner (North Coast Reporter)	805-781-7904
KTEA (Local Cambria Radio Station)	Office	805-924-0103
KSBY (Local SLO County TV Station)	Newsroom	805-597-8400

2. COLLECTION SYSTEM EVENT CALLOUT DATA SHEET

COLLECTION SYSTEM EVENT CALLOUT DATA SHEET

***ALL BLANKS MUST BE COMPLETED! ***

Report prepared by: _____

Prepared Date: _____

Date call was received:	
Time call was received:	
Name of caller:	
Phone number of caller:	
Caller's Association (ex. CCSD, SPPD, Public Works)	
Site Address:	
Nearest Cross Street:	
Call issued to:	
Date and Time of Response:	
Name of Responder(s):	
1. Spill Type: (Category 1,2,3,4)	
2. Estimated Spill Volume:	
2a. Estimated spill volume that reached a separate storm drain that flows to a surface water body?	
2b. Estimated Spill volume recovered from the separate storm drain that flows to surface water body?	

2c. Estimated spill volume that directly reached a drainage channel that flows to a surface water body?				
2d. Estimated spill volume recovered from a drainage channel that flows to a surface water body?				
2e. Estimated spill volume discharged directly to a surface water body?				
2f. Estimated spill volume recovered from surface water body?				
2g. Estimated spill volume discharged to land? (Includes discharges directly to land, and discharges to a storm drain system or drainage channel that flows to a storm water infiltration/retention structure, field, or other non-surface water location. Also, includes backup to building structures)				
2h. Estimated spill volume recovered from discharge to land? (Do not include water used for clean-up)				
3. Did the spill discharge to a drainage channel and/or surface water?				
4. Did the spill reach a storm drainpipe that is not part of a combined sewer?				
5. If spill reached a separate storm drainpipe, was all wastewater fully captured from separate storm drain and returned to the sanitary sewer system?				
6. Spill location name:				
7. Latitude of spill location:	Deg:	Min:	Sec:	Decimal:
8. Longitude of spill location:	Deg:	Min:	Sec:	Decimal:

9. County	San Luis Obispo
10. Regional Water Quality Control Board:	Region 3 -Central Coast
11. Spill Location Description:	
11a. Street Name:	
11b. Suite/Apt:	
11c. Cross street:	
11d. State:	CA
11e. Zip Code	
11f. County	San Luis Obispo
12. Number of appearance points:	
13. Spill appearance point: (Hold Ctrl key to Select Multiple answers from list)	☐ Backflow Prevention Device ☐ Combined Sewer D.I. (Combined CS Only) ☐ Force Main ☐ Gravity Mainline ☐ Inside Building or Structure ☐ Lateral Clean Out (Private) ☐ Lateral Clean Out (Public) ☐ Manhole ☐ Other sewer system structure ☐ Pump station ☐ Upper Lateral (Private) ☐ Upper Lateral (Public)
14. Spill appearance point explanation: (required if spill appearance point is “Other sewer system structure” and/or multiple appearance points are selected)	
15. Final spill destination:	☐ Beach ☐ Building or Structure ☐ Combined Storm Drain (Combined CS only) ☐ Drainage channel ☐ Other (specify below) ☐ Paved Surface ☐ Separate Storm Drain ☐ Street/Curb and Gutter ☐ Surface Water ☐ Unpaved Surface

16. Explanation of final spill destination: (required if final spill destination is “Other”)	
17. Estimated spill start date/time:	
18. Date and time sanitary sewer system agency was notified of or discovered spill:	
19. Estimated Operator arrival date/time:	
20. Estimated spill end date/time:	
21. Spill cause:	
22. Spill cause explanation:	
23. Where did failure occur?	
24. Explanation of Where Failure Occurred: (Required if Where failure Occurred is “Other”)	
25. Was this spill associated with a storm event?	
26. Diameter of sewer pipe at the point of blockage or failure:	
27. Material of sewer pipe at the point of blockage or failure:	
28. Estimated age of sewer asset at the point of failure: (Years)	
29. Spill response activities: (Hold Ctrl key to select Multiple answers form list)	☐ Cleaned-up. ☐ Mitigated Effect of Spill ☐ Contained all or portion of spill. ☐ Other (specify below) ☐ Restored flow. ☐ Returned All Spill to Sanitary Sewer System ☐ Returned Portion of Spill to Sanitary Sewer ☐ Property Owner Notified ☐ Other Enforcement Agency Notified
31. Spill Response completion date:	

32. Spill corrective action taken: (Hold Ctrl key to Select Multiple answers from the list)	☐ Added sewer to preventive maintenance program. ☐ Adjusted schedule/method of preventive maintenance. ☐ Enforcement action against FOG source ☐ Inspected Sewer Using CCTV to Determine Cause ☐ Other (specify below) ☐ Plan rehabilitation or replacement of sewer ☐ Repaired Facilities or Replace Defect
33. Explanation of spill corrective action taken: (Required if spill corrective action is "Other")	
34a. Is there an ongoing investigation?	
35. Explanation of volume estimation methods used:	
36a. Name and Title (Contact person who can answer specific question about spill)	
36b. Contact Person Phone Number	
37. Description of terrain surrounding point of blockage or spill cause if applicable:	
38. Spill response activities. Describe how spill was stopped and cleaned up:	
39. Spill response completion date:	
40. Were health warnings posted?	YES OR NO
41. Name of impacted rivers or streams if applicable:	
42. Name of impacted surface water if applicable:	
43. Is there an ongoing investigation?	YES OR NO
44. Water quality sample analyzed for:	
45. Water quality sample results reported to:	☐ County Health Agency ☐ Regional Water Quality Control Board ☐ No Water quality samples taken. ☐ Not applicable to this spill

46. Spill corrective action taken: Check all that apply.	☐ Added sewer to preventive maintenance program. ☐ Adjusted schedule/method of preventative maintenance. ☐ Enforcement action against FOG source ☐ Plan rehabilitation or replacement of sewer ☐ Repaired sewer ☐ Other- explain
47. OES Control Number #	
48. OES called date and time:	
49. County Health Agency Notified:	YES OR NO Phone: 805-781-5544 Fax: 805-781-4211 After Hours Phone: 805-781-4550
50. County Health agency notified date/time:	
51. Regional Water Quality Control Board notified date/time:	
52. Other Agency Notified:	
53. Was any of this spill report information submitted via fax to the Regional Water Control Board?	
54. Date and Time spill report was submitted via email to the Regional Quality Control Board:	

3. SPILL CATEGORY DEFINITIONS

For the purposes of reporting, SSOs fall into one of three categories. The definitions for each Category are listed in the table below.

CATEGORIES	DEFINITIONS [see Section 5.13.1 Spill Categories of General Order 202-0103-DWQ]
CATEGORY 1 SPILL	A Category 1 spill is a spill of any volume of sewage from or caused by a sanitary sewer system regulated under General Order 2022-0103-DWQ that results in a discharge to: • A surface water, including a surface water body that contains no flow or volume of water; or • A drainage conveyance system that discharges to surface waters when sewage is not fully captured or returned to the sanitary sewer system or disposed of properly. Any spill volume not recovered from a drainage conveyance system is considered a discharge to surface water unless the drainage conveyance system discharges to a dedicated stormwater infiltration basin or facility. A spill from an Enrollee-owned and/or operated lateral that discharges to a surface water is a Category 1 spill; the Enrollee shall report all Category 1 spill per section 3.1 of Attachment E1 (Notification, Monitoring, Reporting and Recordkeeping Requirements) of this General Order.
CATEGORY 2 SPILL	A Category 2 spill is a spill of 1,000 gallons or greater, from or caused by a sanitary sewer system regulated under this General Order that does not discharge to a surface water. A spill of 1,000 gallons or greater that spills out of a lateral and is cause by a failure or blockage in the sanitary sewer system, is a Category 2 spill.
CATEGORY 3 SPILL	A Category 3 spill is a spill of equal to or greater than 50 gallons and less than 1,000 gallons from or caused by a sanitary sewer system regulated under this General Order that does not discharge to a surface water. A spill of equal to or greater than 50 gallons and less than 1,000 gallons, that spills out of a lateral and is caused by a failure or blockage in the sanitary sewer system is a Category 3 spill.
CATEGORY 4 SPILL	A Category 4 spill is a spill of less than 50 gallons, from or caused by a sanitary sewer system regulated under this General Order that does not discharge to a surface water. A spill of less than 50 gallons that spills out of a lateral and is caused by a failure or blockage in the sanitary sewer system is a Category 4 spill

4. NOTIFICATION, REPORTING, MONITORING, & RECORD KEEPING REQUIREMENTS

Spill Category 1: Spills to Surface Waters (Attachment E2/ Table E2-1) ORDER WQ 2022-0103

Spill Requirement	Due	METHOD
NOTIFICATION	**Within 2 hours** of the Enrollee's knowledge of a Category 1 spill of 1,000 gallons or greater, discharge to surface waters: Notify the California Office of Emergency Services and **obtain a notification control number**.	**Call Cal OES at: (800) 852-7550** (Section 1 of Attachment E1)
MONITORING	• Conduct spill-specific monitoring; • Conduct water quality sampling of the receiving water within **18 hours** of initial knowledge of spill of 50,000 gallons or greater to surface waters.	(Section 2 of Attachment E1)
REPORTING	• Submit Draft Spill Report **within 3 business days** of the Enrollee's knowledge of the spill; • Submit Certified Spill Report **within 15 calendar days** of the spill end date; • Submit Technical Report **within 45 calendar days** after the spill end date for a Category 1 sill in which **50,000 gallons or greater** discharged to surface waters; and • **Submit Amended Spill Report within 90 calendar days** after the spill end date.	(Section 3.1 of Attachment E1)

Spill Category 2: Spills of 1,000 gallons or Greater That Do Not Discharge to Surface Waters (Attachment E2/ Table E2-2) ORDER WQ 2022-0103

Spill Requirement	Due	METHOD
NOTIFICATION	**Within 2 hours** of the Enrollee's knowledge of a Category 2 spill of 1,000 gallons or greater, discharging or threatening to discharge to waters of the State: Notify the California Office of Emergency Services and **obtain a notification control number**.	**Call Cal OES at: (800) 852-7550** (Section 1 of Attachment E1)
MONITORING	• Conduct spill-specific monitoring;	(Section 2 of Attachment E1)
REPORTING	• Submit Draft Spill Report **within 3 business days** of the Enrollee's knowledge of the spill; • Submit Certified Spill Report **within 15 calendar days** of the spill end date; • Submit Amended Spill Report **within 90 calendar days** after the spill end date.	(Section 3.2 of Attachment E1)

Spill Category 3: Spills of Equal or Greater than 50 gallons and less than 1,000 gallons That Do Not Discharge to Surface Waters (Attachment E2/ Table E2-3) ORDER WQ 2022-0103

Spill Requirement	Due	METHOD
NOTIFICATION	Not Applicable	Not Applicable
MONITORING	• Conduct spill-specific monitoring;	(Section 2 of Attachment E1)
REPORTING	• Submit monthly Certified Spill Report to the online CIWQS Sanitary Sewer System Database within **30 calendar days** after the end of the month which the spill occurred; and • Submit Amended Spill Reports	(Section 3.2 of Attachment E1)

Spill Category 4: Spills Less Than 50 Gallons That Do Not Discharge to Surface Water (Attachment E2/ Table E2-4) ORDER WQ 2022-0103

Spill Requirement	Due	METHOD
NOTIFICATION	Not Applicable	Not Applicable
MONITORING	• Conduct spill-specific monitoring;	(Section 2 of Attachment E1)
REPORTING	• If, during any calendar month, Category 4 spills occur, certify monthly, the estimated total spill volume exiting the sanitary sewer system, and the total number of all Category 4 spills into the online CIWQS Sanitary Sewer System Database, within 30 days after the end of the calendar month in which the spills occur. • Uploaad and certify a report, in an acceptable digital format, of all Category 4 spills to the online CIWQS Sanitary Sewer System Database, by February 1st after the end of the calendar year in which the spills occur.	(Section 3.4, 3.6, 3.7 and 4.4 of Attachment E1)

5. FLOW ESTIMATION GUIDE

6. SANITARY SEWER SPILL SOP

N:\Cambria CSD\Cambria-2025-002 SSMP Update\300 Engineering\307 Reports\Appendices\Appendix H - SSO Reporting Packet.docx

1. RESPONDING TO A SEWER BACK-UP/OVERFLOW:

   a) Once you receive a call or call-out for a sewer back-up/overflow, proceed immediately to the reported location of the overflow.

   b) Upon arriving at the location and determining that the report is, in fact, a sewer back-up/overflow within your service area, contact the Chief or Senior Operator or another employee for assistance with the Vac-con Truck to clear the blockage.

2. SECURING THE AREA:

   a) After contacting Cambria CSD Staff to respond to the Sewer Back-Up/Overflow, secure the area with safety cones and wait until Staff arrives with Vac-con Truck and/or all Spill Response Equipment to clear and or clean the blockage or spill.

   b) If the Sewer Back-Up/Overflow is in a high traffic area contact the Sheriff's Administration and request traffic control:

      Sheriff's Administration: 805-781-4550

      If after hours call: 911

   c) Once Staff has cleared the Sewer Back-Up/Overflow, clean up and wash down the area affected by the Sewer Back-Up/Overflow per Cambria CSD procedures.

   d) You are to **REMAIN AT THE SITE** until Staff has completed clearing the Sewer Back-Up/Overflow and has washed down, cleaned, and secured the area.

3. SAFETY VESTS AND LIGHT BARS:

   a) You are to always wear your safety vest when working in the street or whenever and wherever your safety is at the **SLIGHTEST POSSIBLE RISK!**

7. SPILL FACTS AND GUIDELINES

- **RESPOND SAFELY!** Be aware of the dangers. Arrive on site wearing the proper personal protective equipment (PPE), including a safety vest, rubber gloves, and steel-toed boots. Watch for oncoming traffic.
- **ABSOLUTELY NO SMOKING!** Sewer gases may be present creating an explosive environment.
- **CONTAINMENT IS THE KEY!** We want to contain any overflow from reaching the storm drain and direct the flow so that there is minimal public exposure.
- **WHERE IS THE OVERFLOW COMING FROM?** Identify the source; is it coming from the street (i.e., Manhole lids) or from private property (i.e., A cleanout)?
- **LATERAL LINES ARE PRIVATE PROPERTY:** If an overflow is caused by a blockage on a private property lateral line, it is the owner's responsibility to remove the blockage and clean the area. If the overflow has reached the street, we will clean only the area on public property.
- **ONLY HYDRANT FLUSH WHEN DIRECTED:** Typically, the less water used the better. Only in cases when there are no storm drains present, traffic is controlled, containment is set up, and vacuum equipment is on site can flushing be used.
- **DISINFECTION:** Apply environmental biodegradable cleaning and masking agent after cleanup. Do not allow any disinfectant to go down a storm drain that cannot be removed.
- **LEAVE IT CLEAN!** Do not leave the area without having the area properly disinfected and cleaned. Leave no trash or debris where it could come in contact with the public. Do not dispose of contaminated items down a storm drain. Do not leave any containment material in the street. If a private property has become contaminated due to a collection system blockage, communicate to them the disinfection method, and clean up procedures. A professional restoration service may need to be called out to perform further clean up.

Appendix H

Enhanced Maintenance Areas

CAMBRIA COMMUNITY SERVICES DISTRICT
ENHANCED MAITENENCE AREAS

Line ID	Street	Enhanced Maintenance	Clean Freq.	Camera Insp. Freq.
MB-1010 to MB-1011	Moonstone Beach Dr	KeepTrak Hotspot	2.0 years	5.0 years
LH-12383 to LH-12382	Ramsey Rd	Root Removal Hotspot	5.0 years	5.0 years
EV-8023 to EV-8022	Center St.	Grease Alley	0.3 years	5.0 years
EV-8022 to EV-8021	Center St.	Grease Alley	0.3 years	5.0 years
EV-8021 to EV-8020	Main St.	Grease Alley	0.5 years	5.0 years
EV-8020 to EV-8019	Main St.	Grease Alley	0.5 years	5.0 years
EV-8019 to EV-8018	Main St.	Grease Alley	0.5 years	5.0 years
EV-8018 to EV-8017	Main St.	Grease Alley	0.5 years	5.0 years
EV-823 to EV-8023	West St.	Grease Alley	1.0 years	10.0 years
EV-8024 to EV-8023	Center St.	Grease Alley	0.3 years	5.0 years
EV-8025 to EV-8024	Center St.	Grease Alley	0.3 years	5.0 years
EV-8006 to EV-8025	Main St.	Grease Alley	1.0 years	5.0 years
EV-8007 to EV-8006	Main St.	Grease Alley	0.3 years	5.0 years
EV-8008 to EV-8007	Main St.	Grease Alley	0.3 years	5.0 years
EV-8026 to EV-8024	Burton Dr.	Grease Alley	0.3 years	5.0 years
EV-8004 to EV-8026	Burton St.	Grease Alley	0.3 years	5.0 years
EV-824 to EV-8024	Burton Dr.	Grease Alley	1.0 years	5.0 years
EV-826 to EV-8026	Burton Dr.	Grease Alley	0.3 years	5.0 years
EV-8005 to EV-8004	Main St.	Grease Alley	1.0 years	5.0 years
EV-8028 to EV-8027	Main St.	Grease Alley	1.0 years	5.0 years
LH-12158 to LH-12037	Strawberry Canyon	KeepTrak Hotspot	2.0 years	5.0 years
LH-12157 to LH-12158	Strawberry Canyon	KeepTrak Hotspot	2.0 years	5.0 years
LH-12156 to LH-12157	Strawberry Canyon	KeepTrak Hotspot	2.0 years	5.0 years
LH-12155 to LH-12156	Strawberry Canyon	KeepTrak Hotspot	2.0 years	5.0 years
LH-12154 to LH-12155	Strawberry Canyon	KeepTrak Hotspot	2.0 years	5.0 years
LH-12149 to LH-12154	Strawberry Canyon	KeepTrak Hotspot	2.0 years	5.0 years
LH-12160 to LH-12159	Strawberry Canyon	KeepTrak Hotspot	2.0 years	5.0 years
LH-12161 to LH-12160	Strawberry Canyon	KeepTrak Hotspot	2.0 years	5.0 years
LH-CO-1216 to LH-12161	Strawberry Canyon	KeepTrak Hotspot	2.0 years	5.0 years
LH-12352 to LH-12353	Wood Dr.	Root Removal Hotspot	3.0 years	5.0 years
PK-6009 to PK-6008	Hillcrest Dr.	KeepTrak Hotspot	2.0 years	5.0 years
PK-6010 to PK-6009	Hillcrest Dr.	KeepTrak Hotspot	2.0 years	5.0 years
PK-6011 to PK-6010	Hillcrest Dr.	KeepTrak Hotspot	2.0 years	5.0 years
LH-12359 to LH-12357	MacLeod Way	Root Removal Hotspot	1.0 years	2.0 years
PK-6057 to PK-6013	Iva Ct.	Root Removal Hotspot	2.0 years	5.0 years
LH-12256 to LH-12142	Leona Dr.	KeepTrak Hotspot	2.0 years	5.0 years
LH-12413 to LH-12256	Leona Dr.	KeepTrak Hotspot	2.0 years	5.0 years
LH-1213 to LH-12413	Wilcombe Rd.	KeepTrak Hotspot	2.0 years	5.0 years
LH-12291 to LH-12290	Malvern St	Root Removal Hotspot	2.0 years	10.0 years
TW-10073 to TW-10079	London Ln	Root Removal Hotspot	2.0 years	2.0 years
LH-12378 to LH-12377	Wilton Dr.	KeepTrak Hotspot	2.0 years	5.0 years
LH-12376 to LH-12377	Wilton Dr.	KeepTrak Hotspot	2.0 years	5.0 years

LH-12213 to LH-12212	Dorking Ave.	Root Removal Hotspot	2.0 years	5.0 years
LH-12094 to LH-12093	Cowper St	Root Removal Hotspot	2.0 years	2.0 years
LH-12115 to LH-12116	Fern Dr.	KeepTrak Hotspot	0.5 years	5.0 years
LH-12103 to LH-12115	Fern Dr	KeepTrak Hotspot	0.3 years	2.0 years
MB-1011 to MB-1030	Weymouth St.	KeepTrak Hotspot	2.0 years	5.0 years
MB-1030 to MB-1012	Weymouth St.	KeepTrak Hotspot	2.0 years	5.0 years
PH-459 to PH-4058	Plymouth St.	KeepTrak Hotspot	3.0 years	5.0 years
PH-4058 to PH-4090	Plymouth St.	KeepTrak Hotspot	3.0 years	5.0 years
PH-4090 to PH-4092	Plymouth St.	KeepTrak Hotspot	3.0 years	5.0 years
PH-4094 to PH-4093	Plymouth St.	KeepTrak Hotspot	3.0 years	5.0 years
PH-401 to PH-4094	Plymouth St.	KeepTrak Hotspot	3.0 years	5.0 years
PH-4084 to PH-4085	Hastings St.	KeepTrak Hotspot	3.0 years	5.0 years
PH-4083 to PH-4084	Hastings St.	KeepTrak Hotspot	3.0 years	5.0 years
PH-4081 to PH-4083	Hastings St.	KeepTrak Hotspot	3.0 years	5.0 years
PH-4080 to PH-4081	Hastings St.	KeepTrak Hotspot	3.0 years	5.0 years
PH-480 to PH-4080	Hastings St.	KeepTrak Hotspot	3.0 years	5.0 years
PH-4076 to PH-4077	Dorset St	KeepTrak Hotspot	3.0 years	5.0 years
PH-4075 to PH-4076	Dorset St.	KeepTrak Hotspot	3.0 years	5.0 years
PH-4074 to PH-4075	Dorset St.	KeepTrak Hotspot	3.0 years	5.0 years
PH-4093 to PH-4093.1	Plymouth St	KeepTrak Hotspot	2.0 years	5.0 years
LH-12377 to LH-12420	Wilton Dr to Dog Park	KeepTrak Hotspot	2.0 years	5.0 years
HH-3011 to HH-3011A	Croyden Ln to Kent St	KeepTrak Hotspot	2.0 years	5.0 years
EV-8027 to EV-8005	Main St.	Grease Alley	1.0 years	5.0 years
LH-12396 to LH-12395	Ramsey Rd	KeepTrak Hotspot	2.0 years	3.0 years
LH-12351 to LH-12352	Wood Dr.	Root Removal Hotspot	2.0 years	3.0 years
LH-12159 to LH-12155	Strawberry Canyon	KeepTrak Hotspot	2.0 years	5.0 years
LH-12154 to LH-12155	Strawberry Canyon	KeepTrak Hotspot	2.0 years	5.0 years
HH-3011A to HH-3011B	Croyden Ln to Kent St	KeepTrak Hotspot	2.0 years	5.0 years
PK-6066 to PK-6009	Northampton St	KeepTrak Hotspot	2.0 years	
LH-12420 to LH-12421	Wilton Dr to Dog Park	KeepTrak Hotspot	2.0 years	5.0 years
LH-12421 to LH-12335.1	Wilton Dr to Dog Park	KeepTrak Hotspot	2.0 years	5.0 years
PK-6009 to PK-6008	Hillcrest Dr.	KeepTrak Hotspot	2.0 years	5.0 years
WV-7001 to PH-4112	Main St.	High Clean Frequency	1.0 years	5.0 years
EV-8017 to WV-7031	Main St.	High Clean Frequency	1.0 years	5.0 years
WV-7031 to WV-7030	Main St.	High Clean Frequency	1.0 years	5.0 years
WV-7030 to WV-7029	Main St.	High Clean Frequency	1.0 years	5.0 years
WV-7029 to WV-7027	Main St.	High Clean Frequency	1.0 years	5.0 years
WV-7027 to WV-7026	Main St.	High Clean Frequency	1.0 years	5.0 years
EV-8001 to EV-8017	Main St.	High Clean Frequency	0.5 years	5.0 years
LH-12306 to LH-12321	Patterson Pl.	High Clean Frequency	0.3 years	3.0 years
LH-12321 to LH-12320	Patterson Pl.	High Clean Frequency	1.0 years	5.0 years
LH-12116 to LH-12117	Fern Dr.	High Clean Frequency	1.0 years	5.0 years
PH-4112 to MB-1024	Moonstone Beach Dr.	High Clean Frequency	1.0 years	5.0 years
PH-4001 to PH-4002	Windsor Blvd.	High Clean Frequency	1.0 years	5.0 years
MB-1024 to MB-1025	Windsor Blvd	High Clean Frequency	1.0 years	5.0 years
MB-1005 to MB-1004	Moonstone Beach Dr.	High Clean Frequency	1.0 years	5.0 years
MB-1004 to MB-1003	Moonstone Beach Dr.	High Clean Frequency	1.0 years	5.0 years

MB-1003 to MB-1002	Moonstone Beach Dr.	High Clean Frequency	1.0 years	5.0 years
PH4007.1 to PH-4002	Windsor Blvd	High Clean Frequency	1.0 years	5.0 years
PH-4002 to WWTP	Heath Ln	High Clean Frequency	1.0 years	5.0 years
8 inch Syphon MB-1026 to	Windsor Blvd	High Clean Frequency	0.3 years	
10 inch Syphon MB-1026 to	Windsor Blvd	High Clean Frequency	0.3 years	
MB-1025 to MB-1026	Windsor Blvd	High Clean Frequency	1.0 years	5.0 years
WV-7029 to WV-7027	Main St.	High Clean Frequency	1.0 years	5.0 years

Appendix I

Capital Improvement Plan List

Working Draft - 3/8/2022						
Wastewater Projects			**FY Project Cost**	**10-Yr Cost**	**Notes**	
FY	***PID***	***Treatment Plant Projects in SST (All SST Cost Estimates as of 11/8/2021)***				
20-21		Investment Grade Audit (IGA)	0	$ 528,404	Wastewater portion of IGA cost; includes 30% design for all ECMs	
	WW1	(ECM 1) Influent Flow Equalization	0	$ 1,534,421	From IGA "Sewer Fund Base Project" - Includes refurbished tanks	
		(ECM 2) Influent Lift Station	0	$ 18,261	From IGA "Sewer Fund Base Project" - Baffle plate only; Other influent lift station mods pulled	
		(ECM 3) Modified Ludzak-Ettinger Process Upgrade	0	$ 1,223,778	From IGA "Sewer Fund Base Project"	
		(ECM 4) Blower Improvements	0	$ 258,372	From IGA "Sewer Fund Base Project"	
		(ECM 5) RAS and WAS Pumping Improvements	0	$ 637,716	From IGA "Sewer Fund Base Project" - RAS pumping system; WAS pumping system; scum pumps replacement; skimming troughs replacement; electrical/I&C	
20-21		(ECM 7) Electrical Upgrades	0	$ 293,783	From IGA "Sewer Fund Base Project" - Replace transformer, new Y series breaker	
20-21		(ECM 8) Backup Power	0	$ 423,327	From IGA "Sewer Fund Base Project" - Generator replacement (includes civil scope for electrical work)	
		(ECM 9) SCADA System	0	$ 551,012	From IGA "Sewer Fund Base Project"	
		(ECM 10) Secondary Water System (3W) Improvements	0	$ 318,202	From IGA "Sewer Fund Base Project" - Submersible pumps, hydrpneumatic tank, demo, electrical/I&C	
		Pads for electrical ECMs		$ 313,893		
		Final Design		$ 308,394		
		Project Duration/General Condition Costs		$ 1,117,904		
		(ECM 11) Effluent Pump Station Improvements	0	$ 374,580	Demo; surge tank replacement; instrumentation; replace air release valves; pipeline cleaning and flushing; electrical/I&C	
		(ECM 12) Sewer Lift Stations	0	$ 2,128,564	LS A, B4, 4, 8 only - Bypassing; VFDs; Equipment & Material Demo; Pumps, guiderails, valves, and piping installation; upper concrete wet well deck & hatches (installation); electrical/I&C; new concrete and repair coatings	
		(ECM 6) Sludge Thickening	0	$ 1,393,341	Rehabilitate rotary drum thickener and screw press; new transfer pumps; stabilization tanks; aeration system and control valve; demo of clarifiers; rolloff area with roof; electrical/I&C	
		(ECM 2) Influent Lift Station Modifications	0	$ 2,110,000	Includes items pulled from "Sewer Fund Base Project" -New HE submersible pumps with VFD; wet well coating; new access hatches	
		Tertiary Treatment		$ 889,436	Evaluated, but removed from "Sewer Fund Base Project"	
		Storm Drain		$ 130,521	Evaluated, but removed from "Sewer Fund Base Project"	
		Demolish Old Tanks		$ 567,815	Evaluated, but removed from "Sewer Fund Base Project"	
Subtotal		**Subtotal**	**0**	**$ 15,121,724**		
FY		***Treatment Plant Projects Not in SST***				
20-21		Security Improvements	0	$ 15,000		
20-21		Replace Van - Transport of Sewer Video Camera System	0	$ 55,000		
		Walkway Grating on Digester Tanks	0	$ 20,000		
		Clarifier Improvements				
		Eastern clarifier - Replace chain drive	0	$ 40,000		
		Eastern clarifier - Replace drive unit's metalic hubs with non-corrosive hubs	0	$ 35,000		
		Eastern clarifier - Replace clarifier chain, wear shoes, skid plates, & sprockets	0	$ 40,000		
		Western clarifier - Replace clarifier chain, wear shoes, skid plates, & sprockets	0	$ 40,000		
		Rehab North sludge holding tank		$ 1,393,341	We were unable to afford this in the SST project and it still needs to be done	
		Van Gordon House (split with Water Dept)		$ 50,000	This is crap and should be given to the State Parks	
		Demolish Old Tanks at back of WWTP		$ 567,815	Base bid for WWTP RFP; anticipate this would be financed; SST/ wWe believe this can be done for $80,000	
		Replacement blower for the plant		$ 400,000	Not in SST/future back-up-This should be done in the next 5 years	
		Reroute effluent line around state parks		$ 2,000,000	Approximately 1 million per mile	
		New polymer skid for sludge press		$ 85,000	The skid we have is on its way out. We have replaced all the components except the controls. Without this process the sludge handling is stopped	
		Repair driveway at the entrance to the plant		$ 20,000	This is District owned and in very bad condition.	
		Cargo box for storage		$ 10,000	We would like to free up room in the shop to work on projects and vehicles	
		Paint handrails on digesters		$ 20,000	This was done when the new handrails were installed and should be painted every 5 years	
		Paint handrails on aeriation basin and clarifiers		$ 30,000	These handrails are fiberglass and should be painted every 5 years	

		Cover for Sheltering of Equipment @ Plant (50%)	0	$ 15,000		
		Subtotal	**0**	**$ 290,000**		
FY		***Collection System Projects***				
		Lift Station A (Nottingham & Leighton/Park Hill)	0	$ 490,000	New Submersible Pumps, MCC, Bypass Piping, Control Panel at Grade Elevation	
		Lift Station A-1 (Sherwood & Harvey/Marine Terrace)	0	$ 265,000	New Submersible Pumps, Bypass Piping	
		Lift Station B - (SR Creek/Behind Park Hill)	0	$ 435,000	New Control Panel, Generator, Wet Well, Submersible Pumps, and Valve Vault	
		Lift Station B-2 (Wood Dr./E. Lodge Hill)	0	$ 425,000	New Control Panel at Grade Elevation	
		Lift Station B-3 (Green St./W. Lodge Hill)	0	$ 500,000	New Control Panel, Submersible Pumps, MCC, Bypass Piping	
		Collection System Assessment software (E.g, t4 Spatial or other)	0	$ 10,000		
Subtotal		**Subtotal**	**0**	**$ 2,125,000**		
			GRAND TOTAL	**$ 17,536,724**		

Completed Projects			**FY Project Cost**	**10-Yr Cost**	**Actual Cost**	**Notes**
FY		***Vehicles and Trailer- Mounted Equipment***				
		Replace tractor		$ 75,000		FY 2021-22 Purchase
20-21		Replace F150	0	$ 30,000		FY 2021-22 Purchase
19-20		Pearpoint or equal TV inspection camera (removed cost from mid year total to meet reduced funding balance, 11/20/2018.)	0	$ 75,000	$ 75,000	
18-19		F-350 Service Truck with Crane Body	0	$ 57,040	$ 56,540	
19-20		Vactor truck - replace with new $430K truck that meets emssion requirements (7 yr loan @ 4.5%)		$ 518,000	$ 402,435	
19-20		Replacement Rack Truck (F-150)	0	$ 24,193	$ 24,193	
FY		***Treatment Plant Projects Not in SST***				
18-19		Influent screen, support platform design, & installation	0	$ 164,509	$ 156,675	
FY		***Collection System Projects***				
19-20		Lift Station A-1 MCC, SCADA Improvements	0	$ 45,000	$ 50,835	
				GRAND TOTAL	**$ 765,678**	

Appendix J

Manhole Inspection Form

Cambria Community Services District

Manhole Inspection Form

Date: _____

Manhole No.: _____ Depth: _____

Frame Centered: _____ Collar Intact: _____

Surface: ☐ Asphalt ☐ Concrete ☐ Soil ☐ Landscaping ☐ Above Grade ☐ Below Grade

Pipe Material

Inlet Pipe ☐ VCP ☐ Concrete ☐ DI ☐ Cast Iron ☐ PVC ☐ Other

Outlet Pipe ☐ VCP ☐ Concrete ☐ DI ☐ Cast Iron ☐ PVC ☐ Other

If Other: _____

MH Material ☐ Brick ☐ Concrete ☐ HDPE ☐ Other _____

Evidence of I/I _____ Solids in Channel: _____

No. of Inlets: _____

Diagram:

Photo No.: _____

Appendix K

Internal Audit

CAMBRIA COMMUNITY SERVICES DISTRICT

SANITARY SEWER MANAGEMENT PROGRAM INTERNAL AUDIT

DATE OF INSPECTION: _____

NAME OF INSPECTOR: _____

ATTENDEES: _____

_____

Section I. Assessment

	YES	NO	COMMENTS
1. Is there a current map of the collection system?			
2. Is there a copy of the master map on file?			
3. Is there more than one version of the collection system map being used in the field?			
4. Are map changes being reported according to program policy?			
5. Are there any known discrepancies with the current master map?			
6. How many SSO events have occurred in the last 12 months?			
7. Is there documentation confirming reporting on CIWQS database?			
8. Has the number of SSO events increased or decreased in the past 12 months?			
9. How many Category 1 spills were reported in the last 12 months?			

10. How many Category 2 spills were reported in the last 12 months?			
11. How many Category 3 spills were reported in the last 12 months?			
12. How many SSO's reported in the last 12 months were private lateral spills?			
13. How many SSO events required sampling for contaminates?			
14. How many SSO events have been caused by grease?			
15. Have there been any problems noted in response to SSO events?			
16. Are there any critical areas where the impact of an SSO event could be significant?			
17. Are there any blind areas in the Cambria CSD where an SSO could go unnoticed for a period of time?			
18. Have SSO events been documented on a map with cause identified?			
19. What areas of the system have reoccurring SSO events?			
20. Is there a plan to address these areas?			
21. When is annual line cleaning performed?			
22. Who is responsible for the collection system cleaning?			
23. Is the annual line cleaning program written down?			

24. What percentage or total footage is cleaned annually?			
25. How often does the entire system get cleaned?			
26. Is cleaning followed by closed circuit television inspections?			
27. Who reviews the closed-circuit television inspection?			
28. What issues were found during the last closed-circuit television inspection?			
29. Are manhole inspections being performed?			
30. Have any significant problems been identified with manhole inspections?			
31. Is there a CMMS database being used to develop and track collection system work orders?			
32. Are Hot Spot areas documented and tracked in a work order system?			
33. Are there any other collection system maintenance activities entered in a work order system?			
34. Have rehabilitation and replacement projects been included in the capital improvement plan?			
35. What projects are planned for the current year?			

36. Have there been any projects planned that have been postponed?			
37. How are projects prioritized?			
38. Is there adequate funding to address the needs for rehabilitation and replacement?			
39. What rehabilitation and replacement projects have been completed in the past 12 months?			
40. Have rehabilitation and replacement projects that are not immediately required been identified and budgeted for?			
41. Do the CIP costs include all project costs including planning, design, construction, and inspection?			
42. Is there technical and safety training documented for collection system staff?			
43. Have staff participated in CWEA certification and training for collection system maintenance?			
44. Have staff obtained advanced certification in the past 12 months?			
45. Does staff have the appropriate licensing and training for the needed equipment?			
46. What equipment is available for collection system maintenance and response?			
47. Are equipment maintenance and upgrades budgeted for?			

48. Is there a replacement plan for equipment used in the collection system?			
49. Have critical components of system been identified?			
50. Are adequate supplies on hand to allow for two-point repairs in any part of the system?			
51. Is there a parts standardization policy in place?			
52. Does the utility have a centralized location for storing spare parts?			
53. Does the utility maintain a stock of spare parts for maintenance vehicles and equipment?			
54. Does the utility have a system in place to track and maintain an accurate inventory of spare parts?			
55. For those parts which are not kept in inventory, does the utility have a readily available source or supplier?			
56. Does the utility have a back-up power generator for lift stations?			
57. Does the utility have by-pass capability for lift station operation?			
58. Does utility have standard design criteria?			
59. Have there been changes in the standard specifications for new construction?			

60. Has there been any new construction or installation in the system within the last 12 months?			
61. Who is responsible for reviewing construction criteria and installations?			
62. Has an I/I investigation been performed within the Cambria CSD? When?			
63. Is there a requirement within the Cambria CSD to have lateral connections inspected prior to the sale of property?			
64. Is there periodic review of the design standards used in the Cambria CSD and is it updated as technology advances?			
65. Does the Cambria CSD have a list of approved contractors, developers, and design engineers that can perform construction on the collection system?			
66. Is there a written program for design and construction acceptance for the collection system?			
67. Are there standards within the program for cleaning, CCTV, air and smoke testing, and pressure testing?			
68. Are costs for inspections and design review for collection system construction covered in fees or budget?			
69. Are lift stations checked routinely?			
70. Is capacity adequate in current lift stations?			

71. What methods are used to inform Cambria CSD officials of issues concerning the collection system?			
72. Are there routine reports to Cambria CSD Board informing the Public of activities and needs in the collection system?			
73. Is there a written procedure on informing the Public of activity in the collection system?			
74. Does the Cambria CSD have an active grease program informing the Public of grease problems?			

CAMBRIA COMMUNITY SERVICES DISTRICT

SANITARY SEWER MANAGEMENT PROGRAM INTERNAL AUDIT

DATE OF INSPECTION: _____

NAME OF INSPECTOR: _____

ATTENDEES: _____

_____

Section II. Evaluation

		COMMENTS
Population Served:		
System Size:		
Number of manholes:		
Number of lift stations:		
Percentage of Pipe: a. 6” b. 8” c. 10” d. 12” e. 14” f. 16” g. 18” h. 24” i. 36” j. 42” or greater		

Percentage of Pipe: a. New, within one year b. 2-5 years c. 5-10 years d. 10-20 years e. 20-30 years f. 30-40 years g. 40-50 years h. 50 years or greater		
Capacity of WWTP:		
Age of WWTP:		
Number of Collections Personnel:		
Average amount of SSO's in past year:		
Collection System Maintenance Budget:		
List of any Notices of Violation:		

CAMBRIA COMMUNITY SERVICES DISTRICT

SANITARY SEWER MANAGEMENT PROGRAM INTERNAL AUDIT

DATE OF INSPECTION: _____

NAME OF INSPECTOR: _____

ATTENDEES: _____

_____

Section III. Findings

FINDINGS	CORRECTIVE ACTION NEEDED	COMPLETION DUE BY

Appendix L

Record of Training

mkn

SANITARY SEWER SPILL

WDR REPORTING PACKET

PREPARED BY APT WATER SERVICES, LLC
UPDATED NOVEMBER 2025 BY CCSD UTILITY DEPARTMENT STAFF

(insert file path here)

THIS PACKET CONTAINS:

1. RESPONSE TO SPILL CHECKLIST AND CONTACT LIST
2. COLLECTION SYSTEM EVENT CALLOUT DATA SHEET
3. SPILL CATEGORY DEFINITIONS GUIDE
4. NOTIFICATION, REPORTING, MONITORING, & RECORD KEEPING REQUIREMENTS
5. FLOW ESTIMATION GUIDE
6. SANITARY SEWER SPILL SOP
7. SPILL FACTS AND GUIDELINES

(insert file path here)

1. RESPONSE TO SANITARY SEWER OVERFLOW (SSO) CHECKLIST

☐ **Contact Wastewater Systems Superintendent, Utilities Manager, and General Manager to notify them about the spill.**

CONTACT	TITLE	PHONE NUMBER
Jim Green	Utilities Manager	Office: 805-927-6119 Cell: 805-550-3558
Toni Artho	Wastewater Systems Superintendent	Office: 805-927-6251 Cell: 805-801-3933
Matthew McElhenie	General Manager	Office: 805-927-6230 Cell: 805-503-0466

☐ **Call to dispatch equipment. If working with a contractor, verify contractors are providing assistance. REMEMBER CONTAINMENT IS THE KEY!**

☐ **Warm up truck and equipment. Take the following: CAMERA, GPS, AND REPORTING PACKET.**

☐ **Dispatch to overflow site safely and set up traffic control.**

☐ **Remove blockage and restore flow. Determine blockage cause.**

☐ **If the blockage cannot be removed and flow restored in a reasonable amount of time, set up a bypass using portable pumps and hose until the blockage can be removed and flow restored.**

Notify the following authorities within 2 HOURS of becoming aware of overflow:

CONTACT	TITLE	PHONE NUMBER
Cal OES Warning Center	**Required of sewage spills of 1,000 gallons or more.** **Record Service Control Number in Reporting Packet**	800-852-7550, or 916-845-8911
California Regional Water Quality Control Board	Cecile Blancarte – regulatory representative for compliance and notifications Cecile.blancarte@Waterboards.ca.gov	Office: 805-542-4782

☐ **Clean up any contained portion. Determine the amount of the spill using the picture guide. Determine the amount recovered by how much is in the VacCon tank.**

☐ **If spill reached storm drain or receiving water location, sample for Ammonia and one or more of following: Total Coliform Bacteria, Fecal Coliform Bacteria, E-coli, Enterococcus. Samples should be taken downstream of the point of discharge DCS-001, Point where sewage initially enters receiving water RSW-001, and point**

upstream of discharge RSW-001U. If the receiving water has no flow during the duration of the spill Enrollee must report "No sampling due to no flow" for receiving water sampling location.

- ☐ **Fill out the Collection System Event Callout Data Sheet completely. All blanks must be filled in, including the GPS location. Reports need to be sent to all agencies within 24 hours. Give report to supervisor.**
- ☐ **Fill out Spill Report on CIWQS**

KEY CONTACTS

CONTACT	TITLE	PHONE NUMBER
CAMBRIA COMMUNITY SERVICES DISTRICT 24/7 EMERGENCY CALLS:		**805-927-6223**
Matthew McElhenie	General Manager	Office: 805-927-6230 Cell: 805-503-0466 mmcelhenie@cambriacsd.org
Toni Artho	Wastewater Systems Superintendent/ Chief Plant Operator	Office: 805-927-6251 Cell: 805-801-3933 tartho@cambriacsd.org
Jim Green	Utilities Manager	Office: 805-927-6119 ext. 119 Cell: 805-550-3558 jgreen@cambriacsd.org
Art Garney	WW III Operator	Office: 805-927-6250 Cell: 805-801-8250 agarney@cambriacsd.org
Delon Blackburn	WW II Operator	Office: 805-927-6250 Cell: 805-703-3309
Ben Bivens	WW II Operator/Collections	Office: 805-927-6250 Cell: 805-440-2405
Christien McManus	WW II Operator/Collections	Office: 805-927-6250 Cell: 805-728-5122
Ryan Staley	WW OIT /Collections	Office: 805-927-6250 Cell: 805-215-3334

(insert file path here)

Aron Moe	WW Collection System Worker	Office: 805-927-6250 Cell: 559-205-3890
Emergency Contractors		
G.F. Garcia & sons Beau Garcia	Emergency Contractor – sewer and force main repairs	805-995-3548 Office 805-423-8210 Beau Garcia cell
Hartzell Construction	Emergency Contractor – sewer and force main repairs	805-610-8113
Fluid Resource Management (FRM)	Emergency Contractor – Lift Station Repairs, contracted vacuum removal (Vactor) of sewer obstructions	805-441-5318
Alpha Electrical Service: Kevin Piper	Emergency Contractor - power supply and electrical controls	Cell: 805-235-4728
Smith Electric	On-Call Support	805-621-5000
Tough Automation Andy Thompson	Lift Station Controls, SCADA, and programmable logic controller (PLC) updating and troubleshooting	Cell: 805-400-9015
Al's Septic Pumping Service	Emergency Contractor Sewer line pumping/SSO cleanup responses	805-528-0432
North Coast Tree Services	Placement & filling of sandbags, tree & brush removal	805-927-8525
Professional Pipe Services (aka Pro Pipe)	Sewer Cleaning, Trenchless Repair, and CCTV Inspection Contractor	909-598-9743 800-784-7473
TRAFFIC CONTROL		
Associated Traffic Safety	Flagging & signage	805-461-1600
Traffic Management Inc.	Traffic control plans, permitting	805-585-4986
EROSION CONTROL & SITE RESTORATION SUPPLIES		

(insert file path here)

Pacific Soil Stabilization	erosion control supplies, biodegradable swaddles, de-chlorination tablets, etc.	(805) 925-7737
S & S Seed	Native grass mixes for hydro-seeding & related restoration applications	(805) 684-0436
Dorman Hydroseeding	hydroseeding	(805) 466-2555

ENVIRONMENTAL MONITORING		
Cindy Cleveland Biological Services	Biological monitoring services	Cindy - 805-234-3759 Paul- 805-748-3371
Kevin Merk Associates	Biological monitoring services	805-748-5837
Fruit Growers Lab	Testing	805-783-2940
REGULATORY AGENCIES (Potential impacts on surface water, groundwater, fish or wild animals)		
Cal OES Warning Center	**Required for sewage spills of 1,000 gallons or more. (Notification required within 2 hours for any Class I SSO that is uncontained and enters a waterway, storm drain or ocean.)**	800-852-7550, or 916-845-8911
Central Coast Regional Water Quality Control Board	Cecile Blancarte – regulatory representative for compliance and notifications Cecile.blancarte@Waterboards.ca.gov	Office: 805-542-4782
Division of Drinking Water (District 6)	Jeff Densmore	805-566-1326
Monterey Bay National Marine Sanctuary	**SSOs that could impact the ocean Keegan Angerer, Karen Grimer, Bridget Hoover**	24-hour emergency line 831-236 6797
California Department of Fish and Wildlife - Central Region (Region 4)	Julie Vance	559-243-4005 ex 151
U.S. Fish & Wildlife Service	Stephen P. Henry	805-644-1766
National Marine Fisheries	Dan Lawson	206-526-4740
California Coastal Commission	Dan Carl	831-427-4863
California State Parks Hilltop Dispatch	Any Beach affected areas	805-927-2068 805-927-2171 805-927-2069
County Environmental Health Sheriff's Administration	Spill line If after hours or on land	805-781-5544 Fax: 805-781-4211 805-781-4550
NEWS AGENCIES		

(insert file path here)

Cambrian Newspaper	Kathe Tanner (North Coast Reporter)	805-781-7904
KTEA (Local Cambria Radio Station)	Office	805-924-0103
KSBY (Local SLO County TV Station)	Newsroom	805-597-8400

2. COLLECTION SYSTEM EVENT CALLOUT DATA SHEET

COLLECTION SYSTEM EVENT CALLOUT DATA SHEET

***ALL BLANKS MUST BE COMPLETED! ***

Report prepared by: _____

Prepared Date: _____

Date call was received:	
Time call was received:	
Name of caller:	
Phone number of caller:	
Caller's Association (ex. CCSD, SPPD, Public Works)	
Site Address:	
Nearest Cross Street:	
Call issued to:	
Date and Time of Response:	
Name of Responder(s):	

(insert file path here)

1. Spill Type: (Category 1,2,3,4)	
2. Estimated Spill Volume:	
2a. Estimated spill volume that reached a separate storm drain that flows to a surface water body?	
2b. Estimated Spill volume recovered from the separate storm drain that flows to surface water body?	
2c. Estimated spill volume that directly reached a drainage channel that flows to a surface water body?	
2d. Estimated spill volume recovered from a drainage channel that flows to a surface water body?	
2e. Estimated spill volume discharged directly to a surface water body?	
2f. Estimated spill volume recovered from surface water body?	
2g. Estimated spill volume discharged to land? (Includes discharges directly to land, and discharges to a storm drain system or drainage channel that flows to a storm water infiltration/retention structure, field, or other non-surface water location. Also, includes backup to building structures)	
2h. Estimated spill volume recovered from discharge to land? (Do not include water used for clean-up)	
3. Did the spill discharge to a drainage channel and/or surface water?	
4. Did the spill reach a storm drainpipe that is not part of a combined sewer?	

(insert file path here)

5. If spill reached a separate storm drainpipe, was all wastewater fully captured from separate storm drain and returned to the sanitary sewer system?				
6. Spill location name:				
7. Latitude of spill location:	Deg:	Min:	Sec:	Decimal:
8. Longitude of spill location:	Deg:	Min:	Sec:	Decimal:
9. County	San Luis Obispo			
10. Regional Water Quality Control Board:	Region 3 -Central Coast			
11. Spill Location Description:				
11a. Street Name:				
11b. Suite/Apt:				
11c. Cross street:				
11d. State:	CA			
11e. Zip Code				
11f. County	San Luis Obispo			
12. Number of appearance points:				
13. Spill appearance point: (Hold Ctrl key to Select Multiple answers from list)	☐ Backflow Prevention Device ☐ Combined Sewer D.I. (Combined CS Only) ☐ Force Main ☐ Gravity Mainline ☐ Inside Building or Structure ☐ Lateral Clean Out (Private) ☐ Lateral Clean Out (Public) ☐ Manhole ☐ Other sewer system structure ☐ Pump station ☐ Upper Lateral (Private) ☐ Upper Lateral (Public)			

(insert file path here)

14. Spill appearance point explanation: (required if spill appearance point is “Other sewer system structure” and/or multiple appearance points are selected)	
15. Final spill destination:	☐ Beach ☐ Building or Structure ☐ Combined Storm Drain (Combined CS only) ☐ Drainage channel ☐ Other (specify below) ☐ Paved Surface ☐ Separate Storm Drain ☐ Street/Curb and Gutter ☐ Surface Water ☐ Unpaved Surface
16. Explanation of final spill destination: (required if final spill destination is “Other”)	
17. Estimated spill start date/time:	
18. Date and time sanitary sewer system agency was notified of or discovered spill:	
19. Estimated Operator arrival date/time:	
20. Estimated spill end date/time:	
21. Spill cause:	
22. Spill cause explanation:	
23. Where did failure occur?	
24. Explanation of Where Failure Occurred: (Required if Where failure Occurred is “Other”)	
25. Was this spill associated with a storm event?	
26. Diameter of sewer pipe at the point of blockage or failure:	
27. Material of sewer pipe at the point of blockage or failure:	

(insert file path here)

28. Estimated age of sewer asset at the point of failure: (Years)	
29. Spill response activities: (Hold Ctrl key to select Multiple answers form list)	☐ Cleaned-up. ☐ Mitigated Effect of Spill ☐ Contained all or portion of spill. ☐ Other (specify below) ☐ Restored flow. ☐ Returned All Spill to Sanitary Sewer System ☐ Returned Portion of Spill to Sanitary Sewer ☐ Property Owner Notified ☐ Other Enforcement Agency Notified
31. Spill Response completion date:	
32. Spill corrective action taken: (Hold Ctrl key to Select Multiple answers from the list)	☐ Added sewer to preventive maintenance program. ☐ Adjusted schedule/method of preventive maintenance. ☐ Enforcement action against FOG source ☐ Inspected Sewer Using CCTV to Determine Cause ☐ Other (specify below) ☐ Plan rehabilitation or replacement of sewer ☐ Repaired Facilities or Replace Defect
33. Explanation of spill corrective action taken: (Required if spill corrective action is “Other”)	
34a. Is there an ongoing investigation?	
35. Explanation of volume estimation methods used:	
36a. Name and Title (Contact person who can answer specific question about spill)	
36b. Contact Person Phone Number	
37. Description of terrain surrounding point of blockage or spill cause if applicable:	
38. Spill response activities. Describe how spill was stopped and cleaned up:	
39. Spill response completion date:	
40. Were health warnings posted?	YES OR NO
41. Name of impacted rivers or streams if applicable:	

(insert file path here)

42. Name of impacted surface water if applicable:	
43. Is there an ongoing investigation?	YES OR NO
44. Water quality sample analyzed for:	
45. Water quality sample results reported to:	☐ County Health Agency ☐ Regional Water Quality Control Board ☐ No Water quality samples taken. ☐ Not applicable to this spill
46. Spill corrective action taken: Check all that apply.	☐ Added sewer to preventive maintenance program. ☐ Adjusted schedule/method of preventative maintenance. ☐ Enforcement action against FOG source ☐ Plan rehabilitation or replacement of sewer ☐ Repaired sewer ☐ Other- explain
47. OES Control Number #	
48. OES called date and time:	
49. County Health Agency Notified:	YES OR NO Phone: 805-781-5544 Fax: 805-781-4211 After Hours Phone: 805-781-4550
50. County Health agency notified date/time:	
51. Regional Water Quality Control Board notified date/time:	
52. Other Agency Notified:	
53. Was any of this spill report information submitted via fax to the Regional Water Control Board?	
54. Date and Time spill report was submitted via email to the Regional Quality Control Board:	

(insert file path here)

3. SPILL CATEGORY DEFINITIONS

For the purposes of reporting, SSOs fall into one of three categories. The definitions for each Category are listed in the table below.

CATEGORIES	DEFINITIONS [see Section 5.13.1 Spill Categories of General Order 2022-0103-DWQ]
CATEGORY 1 SPILL	A Category 1 spill is a spill of any volume of sewage from or caused by a sanitary sewer system regulated under General Order 2022-0103-DWQ that results in a discharge to: • A surface water, including a surface water body that contains no flow or volume of water; or • A drainage conveyance system that discharges to surface waters when sewage is not fully captured or returned to the sanitary sewer system or disposed of properly. Any spill volume not recovered from a drainage conveyance system is considered a discharge to surface water unless the drainage conveyance system discharges to a dedicated stormwater infiltration basin or facility. A spill from an Enrollee-owned and/or operated lateral that discharges to a surface water is a Category 1 spill; the Enrollee shall report all Category 1 spills per section 3.1 of Attachment E1 (Notification, Monitoring, Reporting and Recordkeeping Requirements) of this General Order.
CATEGORY 2 SPILL	A Category 2 spill is a spill of 1,000 gallons or greater, from or caused by a sanitary sewer system regulated under this General Order that does not discharge to a surface water. A spill of 1,000 gallons or greater that spills out of a lateral and is caused by a failure or blockage in the sanitary sewer system is a Category 2 spill.
CATEGORY 3 SPILL	A Category 3 spill is a spill of equal to or greater than 50 gallons and less than 1,000 gallons from or caused by a sanitary sewer system regulated under this General Order that does not discharge to a surface water. A spill of equal to or greater than 50 gallons and less than 1,000 gallons, that spills out of a lateral and is caused by a failure or blockage in the sanitary sewer system is a Category 3 spill.
CATEGORY 4 SPILL	A Category 4 spill is a spill of less than 50 gallons, from or caused by a sanitary sewer system regulated under this General Order that does not discharge to a surface water. A spill of less than 50 gallons that spills out of a lateral and is caused by a failure or blockage in the sanitary sewer system is a Category 4 spill

4. NOTIFICATION, REPORTING, MONITORING, & RECORD KEEPING REQUIREMENTS

Spill Category 1: Spills to Surface Waters (Attachment E2/ Table E2-1) ORDER WQ 2022-0103

Spill Requirement	Due	METHOD
NOTIFICATION	**Within 2 hours** of the Enrollee's knowledge of a Category 1 spill of 1,000 gallons or greater, discharge to surface waters: Notify the California Office of Emergency Services and **obtain a notification control number**.	**Call Cal OES at: (800) 852-7550** (Section 1 of Attachment E1)
MONITORING	• Conduct spill-specific monitoring; • Conduct water quality sampling of the receiving water within **18 hours** of initial knowledge of spill of 50,000 gallons or greater to surface waters.	(Section 2 of Attachment E1)
REPORTING	• Submit Draft Spill Report **within 3 business days** of the Enrollee's knowledge of the spill; • Submit Certified Spill Report **within 15 calendar days** of the spill end date; • Submit Technical Report **within 45 calendar days** after the spill end date for a Category 1 sill in which **50,000 gallons or greater** discharged to surface waters; and • **Submit Amended Spill Report within 90 calendar days** after the spill end date.	(Section 3.1 of Attachment E1)

Spill Category 2: Spills of 1,000 gallons or Greater That Do Not Discharge to Surface Waters (Attachment E2/ Table E2-2) ORDER WQ 2022-0103

Spill Requirement	Due	METHOD
NOTIFICATION	**Within 2 hours** of the Enrollee's knowledge of a Category 2 spill of 1,000 gallons or greater, discharging or threatening to discharge to waters of the State: Notify the California Office of Emergency Services and **obtain a notification control number**.	**Call Cal OES at: (800) 852-7550** (Section 1 of Attachment E1)
MONITORING	• Conduct spill-specific monitoring;	(Section 2 of Attachment E1)
REPORTING	• Submit Draft Spill Report **within 3 business days** of the Enrollee's knowledge of the spill; • Submit Certified Spill Report **within 15 calendar days** of the spill end date; • Submit Amended Spill Report **within 90 calendar days** after the spill end date.	(Section 3.2 of Attachment E1)

Spill Category 3: Spills of Equal or Greater than 50 gallons and less than 1,000 gallons That Do Not Discharge to Surface Waters (Attachment E2/ Table E2-3) ORDER WQ 2022-0103

Spill Requirement	Due	METHOD
NOTIFICATION	Not Applicable	Not Applicable
MONITORING	• Conduct spill-specific monitoring;	(Section 2 of Attachment E1)
REPORTING	• Submit monthly Certified Spill Report to the online CIWQS Sanitary Sewer System Database within **30 calendar days** after the end of the month which the spill occurred; and • Submit Amended Spill Reports	(Section 3.2 of Attachment E1)

Spill Category 4: Spills Less Than 50 Gallons That Do Not Discharge to Surface Water (Attachment E2/ Table E2-4) ORDER WQ 2022-0103

(insert file path here)

Spill Requirement	Due	METHOD
NOTIFICATION	Not Applicable	Not Applicable
MONITORING	• Conduct spill-specific monitoring;	(Section 2 of Attachment E1)
REPORTING	• If, during any calendar month, Category 4 spills occur, certify monthly, the estimated total spill volume exiting the sanitary sewer system, and the total number of all Category 4 spills into the online CIWQS Sanitary Sewer System Database, within 30 days after the end of the calendar month in which the spills occur. • Upload and certify a report, in an acceptable digital format, of all Category 4 spills to the online CIWQS Sanitary Sewer System Database, by February 1st after the end of the calendar year in which the spills occur.	(Section 3.4, 3.6, 3.7 and 4.4 of Attachment E1)

(insert file path here)

5. FLOW ESTIMATION GUIDE

6. SANITARY SEWER SPILL SOP

(insert file path here)

1. RESPONDING TO A SEWER BACK-UP/OVERFLOW:

   a) Once you receive a call or call-out for a sewer back-up/overflow, proceed immediately to the reported location of the overflow.

   b) Upon arriving at the location and determining that the report is, in fact, a sewer back-up/overflow within your service area, contact the Chief or Senior Operator or another employee for assistance with the Vac-con Truck to clear the blockage.

2. SECURING THE AREA:

   a) After contacting Cambria CSD Staff to respond to the Sewer Back-Up/Overflow, secure the area with safety cones and wait until Staff arrives with Vac-con Truck and/or all Spill Response Equipment to clear and or clean the blockage or spill.

   b) If the Sewer Back-Up/Overflow is in a high traffic area contact the Sheriff's Administration and request traffic control:

      Sheriff's Administration: 805-781-4550

      If after hours call: 911

   c) Once Staff has cleared the Sewer Back-Up/Overflow, clean up and wash down the area affected by the Sewer Back-Up/Overflow per Cambria CSD procedures.

   d) You are to **REMAIN AT THE SITE** until Staff has completed clearing the Sewer Back-Up/Overflow and has washed down, cleaned, and secured the area.

3. SAFETY VESTS AND LIGHT BARS:

   a) You are to always wear your safety vest when working in the street or whenever and wherever your safety is at the **SLIGHTEST POSSIBLE RISK!**

7. SPILL FACTS AND GUIDELINES

- **RESPOND SAFELY!** Be aware of the dangers. Arrive on site wearing the proper personal protective equipment (PPE), including a safety vest, rubber gloves, and steel-toed boots. Watch for oncoming traffic.
- **ABSOLUTELY NO SMOKING!** Sewer gases may be present, creating an explosive environment.
- **CONTAINMENT IS THE KEY!** We want to contain any overflow from reaching the storm drain and direct the flow so that there is minimal public exposure.
- **WHERE IS THE OVERFLOW COMING FROM?** Identify the source; is it coming from the street (i.e., Manhole lids) or from private property (i.e., A cleanout)?
- **LATERAL LINES ARE PRIVATE PROPERTY:** If an overflow is caused by a blockage on a private property lateral line, it is the owner's responsibility to remove the blockage and clean the area. If the overflow has reached the street, we will clean only the area on public property.
- **ONLY HYDRANT FLUSH WHEN DIRECTED:** Typically, the less water used, the better. Only in cases when there are no storm drains present, traffic is controlled, containment is set up, and vacuum equipment is on site can flushing be used.
- **DISINFECTION:** Apply an environmental biodegradable cleaning and masking agent after cleanup. Do not allow any disinfectant to go down a storm drain that cannot be removed.
- **LEAVE IT CLEAN!** Do not leave the area without having the area properly disinfected and cleaned. Leave no trash or debris where it could come in contact with the public. Do not dispose of contaminated items down a storm drain. Do not leave any containment material in the street. If a private property has become contaminated due to a blockage in the collection system, communicate the disinfection method and cleanup procedures to the property owner. A professional restoration service may need to be called out to perform further cleanup.

CAMBRIA COMMUNITY SERVICES DISTRICT

TO: Resources and Infrastructure Committee AGENDA NO. **4.B.**

FROM: James Green, Utilities Department Manager

Meeting Date: December 15, 2025 Subject: Receive and Discuss the Updated Prioritized CIP List and General Fund CIP Budget Requests and Consideration to Forward the Updated CIP Lists to the Finance Committee for Review in the 2025/2026 Fiscal Year Preliminary Budget

DISCUSSION:
The Capital Improvement Budget, as prepared by the department managers, has been compiled through the department managers' and staff requests. The wastewater and water department's staff requests and recommendations were evaluated through an Ad Hoc committee. They included an analysis of the revenue required to implement the CIP while meeting District financial obligations and operations.
The Utility Department Capital Improvement Program is an ongoing update and planning instrument that drives the evaluation and identification of infrastructure projects needing renovation, repair, and construction. The CIP relates these projected capital needs to the financial sources supporting their completion. These projects are identified, prioritized, and selected, and thus are incorporated into fiscal and strategic planning for the district.

The Capital Improvement Projects included in the CIP are organized based on three structural elements.

- Safety
- Regulatory Compliance/ Health and Community Safety
- Urgency/ Outstanding improvements/ Asset condition

Safety:
Immediate or long-term improvements for operational safety that will support a safer work environment and a safe environment for the community. Projects that provide measurable environmental improvements for the project's life, i.e., increasing water quality, improving air quality, and reducing greenhouse gas emissions.

Regulatory Compliance/ Community Health and Safety:
Ensuring regulatory compliance for water and wastewater treatment. Compliance standards continue to increase each year; therefore, maintaining reliable and efficient operations in both water and wastewater departments is essential to ensure the continued health and protection of the community. Other regulatory requirements include air quality, odor control, and record-keeping. Operational integrity of the existing facilities and improvements need to address future regulatory changes and wet weather treatment capabilities.

Urgency/ Outstanding Improvements/ Asset Improvements:

Fortifying system reliability and essential daily operations are integral to the plan. Investing in and replacing or upgrading existing infrastructure to ensure the district can maintain reliability and quality by replacing aging facilities before failure occurs. The programmatic approach for the projects in the CIP provides timing and definition of project implementation such that the investments can be prioritized and scheduled with the CIP to confirm the district continues to fulfill its mission and meets its goals.

RECOMMENDATION:
It is recommended that the Resources & Infrastructure Committee review and discuss the updated prioritized CIP list and budget requests for the General Fund and Utilities. The Finance Committee will consider the recommendations within the 2025/2026 Fiscal Year Preliminary Budget.

Attachment: Draft Capital Improvement Project (CIP) List

Item	Critical	Rank	Cost
Leimert Generator	1		$ 150,000.00
Leimert Scada rewrite	1		$ 120,000.00
Other SCADA upgrades	1		$ 250,000.00
ZLD		3	$ 4,000,000.00
WRF Analytics		3	$ 200,000.00
WRF UV System		3	$ 200,000.00
SR4 Road	1		$ 500,000.00
Vac Trailer			$ 105,000.00
John Deer Tractor		3	$ 85,000.00
F150/F250/EV truck			$ 100,000.00
Pembrook water main	1		$ 1,300,000.00
Moonstone Saddle replacement		3	$ 1,250,000.00
Brass Meter Bodies (4k m25, 100 m70, 60 m170)	1		$ 1,500,000.00
Brass installation 4k @ $350			$ 1,400,000.00
Mini ex /trailer		3	$ 85,000.00
Wetland Water main	1		$ 4,000,000.00
Move Rodeo Grounds/Water yard (conflict resolution)		2	$ 5,000,000.00
Tank Asset Management program	1		$ 2,000,000.00
Lead and Copper 2027 update.	1		$ 50,000.00
SS2 submersible update w/VFD (Pull or Drill)		3	$ 150,000.00
SS3 Trench and P/S install for B/U power.	1		$ 75,000.00
9P7 pull/camera pulls sand in production		3	
Infrastructure Renewal Program/ Water hydraulic update	1		$ 150,000.00
Leimert Tank/ Booster Station Replacement		3	$ 1,750,000.00
WRF injection pipe rehab		3	$ 100,000.00
			$ 180,000.00

Total Requested $ 24,700,000.00

Item Descriptor	Critical	Rank	2026
Lift Station B4 Rebuild	1	1	$ 2,700,000.00
Lab Roof and Flashing Replacement	1	2	$ 20,000.00
Leak Repair and Flooring replacement Lab	1	3	$ 20,000.00
Asset Management Program and Reporting		4	$ 10,000.00
Effluent Pump Station Level / Flow / pH	1	5	$ 60,000.00
Sludge Thickening South Digester (Piping /Pump/Control	1	6	$ 15,000.00
Fencing and gate replacement at WWTP	1	7	$ 100,000.00
Backup MLE blower demo blower 5~7	1	8	$ 450,000.00
Polymer Skid	1	9	$ 25,000.00
Phased MH and sewer Main Replacement	1	10	$ 25,000.00

Total Requested	$ 3,425,000.00

Docusign Envelope ID: A0CA38D9-809C-4E1B-8583-E18D26802313

RESOLUTION NO. 46-2025
DECEMBER 11, 2025

A RESOLUTION OF THE BOARD OF DIRECTORS
OF THE CAMBRIA COMMUNITY SERVICES DISTRICT
ESTABLISHING THE 2026 CCSD FINANCE, FIRE PROTECTION, PARKS, RECREATION & OPEN SPACE, AND THE RESOURCES & INFRASTRUCTURE COMMITTEES' REGULAR MEETING SCHEDULES

BE IT RESOLVED that the Cambria Community Services District Board of Directors does hereby adopt the 2026 Standing Committee Regular Meeting Schedules, attached hereto as Exhibit A and incorporated herein by this reference.

PASSED AND ADOPTED THIS 11th day of December, 2025.

Signed by:
Harry Farmer
EE0881E493554E4...
Harry Farmer, President
Board of Directors

ATTEST:

DocuSigned by:
Haley Dodson
27CD8D8EE42E4C4...
Haley Dodson
Confidential Administrative Assistant

APPROVED AS TO FORM:

DocuSigned by:
Timothy Carmel
B64D40A50AA141E...
Timothy J. Carmel
District Counsel

Docusign Envelope ID: A0CA38D9-809C-4E1B-8583-E18D26802313

CAMBRIA COMMUNITY SERVICES DISTRICT
FINANCE COMMITTEE
2026 REGULAR MEETING SCHEDULE

January 12, 2026, at 10:00 a.m.
April 13, 2026, at 10:00 a.m.
December 14, 2026, at 10:00 a.m.

Regular meetings will be held at the Veterans' Hall located at 1000 Main Street, Cambria, CA 93428, and via Zoom Webinar. Special meetings may be held on other dates, pursuant to Government Code Section 54956.

CAMBRIA COMMUNITY SERVICES DISTRICT
FIRE PROTECTION COMMITTEE
2026 REGULAR MEETING SCHEDULE

January 15, 2026, at 10:30 a.m.
April 16, 2026, at 10:30 a.m.
August 20, 2026, at 10:30 a.m.
November 19, 2026, at 10:30 a.m.

Regular meetings will be held at the Veterans' Hall located at 1000 Main Street, Cambria, CA 93428, and via Zoom Webinar. Special meetings may be held on other dates, pursuant to Government Code Section 54956.

CAMBRIA COMMUNITY SERVICES DISTRICT
RESOURCES & INFRASTRUCTURE COMMITTEE
2026 REGULAR MEETING SCHEDULE

January 12, 2026, at 2:00 p.m.
April 13, 2026, at 2:00 p.m.
August 17, 2026, at 2:00 p.m.
December 14, 2026, at 2:00 p.m.

Regular meetings will be held at the Veterans' Hall located at 1000 Main Street, Cambria, CA 93428, and via Zoom Webinar. Special meetings may be held on other dates, pursuant to Government Code Section 54956.

Docusign Envelope ID: A0CA38D9-809C-4E1B-8583-E18D26802313

CAMBRIA COMMUNITY SERVICES DISTRICT
PARKS, RECREATION & OPEN SPACE COMMITTEE
2026 REGULAR MEETING SCHEDULE

January 15, 2026, at 2:00 p.m.
April 16, 2026, at 2:00 p.m.
August 20, 2026, at 2:00 p.m.
November 19, 2026, at 2:00 p.m.

Regular meetings will be held at the Veterans' Hall located at 1000 Main Street, Cambria, CA 93428, and via Zoom Webinar. Special meetings may be held on other dates, pursuant to Government Code Section 54956.